QUALITY REGULATIONS FOR PANELS AND PROFILES

OCTOBER 2014

EUROPEAN ASSOCIATION FOR PANELS AND PROFILES

Contents

Preface

The Quality Regulations for Panels and Profiles cover both, panels and cold-formed profiles. The first chapter of the document includes common information for both products. Specific regulations for panels are given in the second chapter and for profiles in the third chapter.

These Quality Regulations come into force after they have been accepted by the General Assembly of the ”European Association for Panels and Profiles” (PPA-Europe).

The latest version of these Quality Regulations has to be used in any case.

For all standards mentioned, the last version published in the Official Journal of the European Union (OJEU) is the basis of these Quality Regulations.

These Quality Regulations are valid for panels and profiles, which are covered by the scopes of the following harmonized European standards (hENs):

- EN 14509 – Self-supporting double skin metal faced insulating panels – Factory made products – Specifications
- EN 14782 – Self-supporting metal sheet for roofing, external cladding and internal lining
  for self-supporting profiles
- EN 1090 - Execution of steel structures and aluminium structures
  for load-bearing profiles

It is the intention of these Quality Regulations to establish a quality assurance system for panels and profiles, which is mainly based on independent third party control.

The task of PPA-Europe is to get experienced third parties to ensure a quality assurance system according to table 1.3 with system A for mechanical and insulation properties, system B for reaction to fire of panels, system D and E for reaction to fire of profiles and system D for tightness properties of panels.

1. Quality Assurance System EPAQ

1.1. Terms and Definitions

For the purposes of this document, the following terms and definitions apply.

1.1.1. EPAQ

EPAQ is the abbreviation for “European Panels and Profiles Assured Quality”. The Quality Label EPAQ will be awarded by the Quality Committees of the European Association for Panels and Profiles (PPA-Europe, or the association). A list of accepted parties according to 1.1.2. to 1.1.5. will be provided under the EPAQ scheme.

1.1.2. Third parties

The tasks of third parties are:

- initial type testing (ITT) and writing the test report
- evaluation and preparation of evaluation report of ITT (task only for independent experts)
- responsibility for and attending of initial inspection and writing the assessment report
- responsibility for and attending of external quality control and writing the evaluation report and assessment report for external quality control.

Third parties may be recognized for one or more fields of experience of the above mentioned tasks with regard to panels and/or profiles.

Third parties are:

- independent laboratories with sufficient experience in testing of panels and/or profiles and in evaluation of the tests and test results of panels and/or profiles or
- a combination of an experienced independent expert acting together with a not-accepted or possibly not impartial laboratory or
- independent laboratories or independent bodies for assessment of factory production control.

1.1.3. Independent laboratories

Independent laboratories that are working under the EPAQ scheme have to be bodies, notified by the notifying authorities of EU members states for products according to the standards mentioned in 1.2.

If an independent laboratory does not fulfil this requirement, the relevant Quality Committee can make a decision about the acceptance of the laboratory as an independent laboratory for use of PPA-Europe, by checking its competence in testing and/or evaluating test reports on panels/profiles.

Independent laboratories are not allowed to evaluate or to prepare the evaluation report of ITT. This task can only be done by an independent expert.

1.1.4. Independent experts

An independent expert is an individual or an individual within a testing laboratory with recognized knowledge in panels and/or profiles technology. In case of FPC assessment, it is also possible that the responsible independent expert is a member of an auditing body.

The independent experts of the Quality Committees have to decide on persons with enough knowledge on panels and/or profiles who want to become independent experts for one or more of the following tasks:

- Responsibility for and attending of initial type testing according to 1.2.2.4. and writing test report
- Evaluation and preparation of evaluation report of initial type testing

- Responsibility for and attending of initial inspection and writing the assessment report
- Responsibility for and attending of external quality control and writing the evaluation report and assessment report for external quality control
- Checking and confirmation of test-, evaluation- and assessment reports for initial type testing, initial inspection and quality control tests.

1.1.5. Independent auditing bodies

In case of FPC assessment, the auditing body is responsible for assessment and writing the assessment report. The independent experts of the Quality Committees decide on the auditing bodies that are working under the EPAQ-scheme.

1.1.6. Test report

Includes all basic test results without calculation of statistical evaluation and other further steps.

1.1.7. Evaluation report

Report worked out by an independent expert determining basic values and properties as a base for awarding and maintenance of the Quality Label on the base of the relevant assessment and test reports.

1.1.8. Assessment report

The reviews are the result from external quality control and FPC in comparison to declared values on the CE-mark and on the Certification Document and in comparison to the requirements of these Quality Regulations.

Assessment reports and summaries have to be written in English, the rest can be written in the language of origin of the third party. If there are problems, the relevant Quality Committee can ask for an English version.

1.1.9. Notified bodies

Bodies assessed and notified by notifying authorities designated by the member states of the EU, that are authorised to carry out third party tasks in the process of assessment and verification of constancy of performance for the purposes of the Construction Product Regulation. According to the relevant hENs for panels, profiles (see Preface) and used core materials, notified bodies are active for fire and insulation properties only.

1.2. Basis of the Quality Assurance System

1.2.1. General

1.2.1.1. Technical basis

Technical basis of the Quality Assurance System are the European standards:

- EN 14509 for panels;
- EN 14782 for self-supporting profiles;
- EN 1090 for load-bearing profiles,

when there are no special regulations given by the Quality Committees. The rules of the Quality Regulations are valid for products used for applications, which are for normal European outdoor and indoor conditions in normal buildings, including cold stores.

1.2.1.2. Quality management system

Companies with a Quality Label EPAQ shall have a quality management system ISO 9001-2008 or higher with implemented Factory Production Control, or have to follow the requirements of a quality management system ISO 9001-2008 or higher with implemented Factory Production Control.

1.2.2. Requirements for third parties for testing

1.2.2.1. General requirements

Third parties who carry out the testing have to work in accordance to the requirements of EN ISO 17020 and EN ISO 17025.

The Testing Rules of the EPAQ scheme have to be applied by testing panels/profiles. It is not permitted to deviate from the testing procedures established in EN 14509 for panels, EN 14782 for self-supporting profiles and/or EN 1090 for load-bearing profiles and the Testing Rules of the association.

1.2.2.2. Third parties for testing

Third parties are either independent laboratories with sufficient experience in panels/profiles testing and evaluation of panels/profiles testing according to 1.2.2.3. or a combination of an experienced independent expert acting together with a not-accepted or possibly not impartial laboratory according to 1.2.2.4.

1.2.2.3. Requirements for independent laboratories

Independent laboratories for testing must fulfil the requirements according to 1.1.3.

1.2.2.4. Requirements for independent experts working with laboratories

Independent experts working together with laboratories can form a third party body.

The independent expert can work with external laboratories, which either do not confirm with 1.2.2.3 or do not have the necessary experience to perform adequate testing or he can work with a manufacturer's laboratory, where the independent expert insures adequacy of testing facilities and procedures as well as independency of the laboratory.

1.2.3. Requirements for third parties for evaluation and assessment

1.2.3.1. General requirements

Evaluation work is undertaken by independent experts (see 1.1.4.), assessment work is undertaken by independent laboratories (see 1.1.3.) or in case of initial inspection and assessment only, auditing bodies (see 1.1.5).

1.2.3.2. Requirements for independent laboratories

Independent laboratories must fulfil the requirements according to 1.1.3.

1.2.3.3. Requirements for independent experts for evaluation and assessment

Independent experts for evaluation and assessment must fulfil the requirements according to 1.1.4.

1.2.3.4. Requirements for auditing bodies for assessment

Auditing bodies for assessment must fulfil the requirements according to 1.1.5.

1.2.4. Requirements for independent experts in the Quality Committees

1.2.4.1. At least two independent experts are elected members of each Quality Committee. They have to be elected by the General Assembly (see Statutes, Article 9).

1.2.4.2. The independent experts of the Quality Committees have to have good experience in testing and evaluating test results of panels and/or profiles.

1.2.5. Technical requirements

1.2.5.1. Table 2.1 shows a list of properties for panels and table 3.1 for profiles, which are under control of the EPAQ scheme concerning the different applications.

Frequency of testing and the number of samples for FPC and external control is regulated in Table 2.3 for panels and in Tables 3.8 and 3.9 for profiles.

In case of:

- dimensional tolerances,
- mechanical resistance,
- durability, where required,
- thermal insulation performance,

the parties involved in the voluntary quality assurance system of the association have the following tasks (see Table 1.1 below):

Duty	Outcome	Party involved
ITT tests	Test report	Third party according to 1.2.2.2.
ITT test evaluation	Evaluation report	Third party according to 1.2.3.3.
Initial inspection	Assessment report	Third party according to 1.2.3.
External Quality Control including assessment of FPC	Evaluation report	Third party according to 1.2.2. (or for assessment of FPC only, auditing body, according to 1.2.3.)

Table 1.1: Tasks of involved parties concerning tolerances, mechanical characteristics, durability, thermal insulation performance

1.2.5.2. In case of:

- Reaction to fire
- Fire resistance
- External fire performance,

test reports and classification reports are to be delivered if no CWFT-decision exists.

1.2.5.3. In case of:

All other properties (e.g. tightness performance) the parties involved in the voluntary quality assurance system of the association have the following tasks (see Table 1.2 below):

Duty	Outcome	Party involved
ITT tests	Test report	Third party according to 1.2.2.2.
ITT test evaluation	Evaluation report	Third party according to 1.2.3.3.
FPC (where required)	Evaluation report	Third party according to 1.2.2. (or auditing body) where required

Table 1.2: Tasks of involved parties concerning other properties

1.2.6. Assessment and verification of product performance

In order to ensure that the performance is accurate and reliable, the performance of the product should be assessed and the production in the factory should be controlled in accordance with an appropriate system of assessment and verification of performance of the product. Under the EPAQ scheme, several systems have been established to be applied for panels and profiles, in order to take into account the specific relationship of some of its essential characteristics to the requirements of a good product quality (Table 1.3).

Tasks		EPAQ Systems				
		A	B	C	D	E
Manufacturer	Determination of the product-type on the basis of type testing (including sampling), type calculation, tabulated values or descriptive documentation of the product			X		X
	Factory Production Control	X	X	X	X	X
	Further testing of samples taken at the factory in accordance with the prescribed test plan	X	X	X		
Third Party	Determination of the product-type on the basis of type testing (including sampling), type calculation, tabulated values or descriptive documentation of the product	X	X		X	
	Initial inspection of the manufacturing plant and of factory production control	X	X	X		
	Continuous surveillance, assessment and evaluation of factory production control	X	X	X		
	Audit-testing of samples taken before placing the product on the market	X				

Table 1.3: EPAQ systems of assessment and verification of product performance

1.3. Procedural Regulations for the award and use of the Quality Label EPAQ

1.3.1. Award of the Quality Label EPAQ

1.3.1.1. The application for the award of the Quality Label EPAQ has to be made in writing to the secretariat of the “European Association for Panels and Profiles”. The application has to be accompanied by a signed and legally binding certificate of undertaking.

1.3.1.2. The application is examined by the relevant Quality Committee. The third party is bound to secrecy in respect of third parties.

1.3.1.3. The association awards, under contract, the right to use the quality label “European Panels and Profiles Assured Quality” to companies that manufacture panels and/or profiles which maintain the compliance with these Quality Regulations. The award of the quality label is only made, in a given instance, in respect of one specific group of products.

1.3.1.4. The Quality Regulations for Panels and Profiles are extended and further developed to match the technical progress made in this area.

1.3.1.5. The procedure that has to be followed to get a quality label is described below:

- Initial type testing (ITT) on the products, for which the quality label is requested.
- Evaluation of the test results, given in a separate evaluation report by an independent expert (see 1.2.3). The reports are passed on to the applicant and to the secretariat of the association.
- Checking of the evaluation (including test report and/or assessment report) by an independent expert of the relevant Quality Committee (see 1.2.4). This independent expert must be different from the independent expert who has done the evaluation.
- The independent experts of the relevant Quality Committee can decide on additional independent experts for checking the evaluation reports.

- An independent expert has to do an initial inspection of FPC. In case of already approved systems confirmed by the relevant Quality Committee, this inspection is not obligatory.
- The costs of the tests and the auditing are borne by the applicant.
- In case of positive results, the independent experts of the relevant Quality Committee decide on the award of the Certification Document.
- If the results are negative, the relevant Quality Committee do not grant the application. The Committee must then provide reasons in writing for the rejection. In this case, the relevant Quality Committee can set a time for the execution of a repetition.
  The manufacturer has the possibility to file an objection to the decision of rejection. The manufacturer has to present arguments in favour of the award of the Certification Document for his products on the next meeting of the relevant Quality Committee.
- After the award of the Certification Document, the manufacturer has to conclude a contract for the external quality control (EQC) with a Third Party.
- After the first EQC, if the requirements were fulfilled (with or without comments) and the assessment report is issued by the responsible Third Party, the Quality Certificate will be awarded to the manufacturer.
- The Quality Certificate has to be signed by the Secretary General and the chairman of the relevant Quality Committee.

1.3.2. Use of the Quality Label EPAQ

1.3.2.1. Quality label users may only use the quality label for products which comply with these Quality Regulations and for which the quality label has been awarded.

1.3.2.2. The owners of the Quality Label EPAQ shall only use the quality label in combination with a certification number.

1.3.2.3. The “European Association for Panels and Profiles” alone has the right to allow a means of identification of the quality label to be produced and supplied to the user of the quality label or to allow the label to be handed out and the use of it to be set out in more detail.

1.3.2.4. The Managing Committee may issue special rules for the use of the quality label in advertising, so that the integrity of competition is preserved and misuse is prevented. Individual advertising must not be hampered by this, although the same maxim regarding the integrity of competition still applies.

1.3.2.5. If the right to use the quality label is withdrawn, the Certification Document and the Quality Certificate have to be returned. The same applies if the right to use the label has expired for any other reason.

1.3.3. Control of the Quality Label EPAQ

1.3.3.1. The “European Association for Panels and Profiles” is justified and is required to control the use of the quality label and the maintenance of the quality regulations.

1.3.3.2. Every quality label user has to undertake the necessary provisions to make sure that the quality regulations are adhered to.

1.3.3.3. Further, he must submit his products, insofar as a quality label exists for them, to a third party. This is done by a laboratory arranged by the association (audit testing). The costs that arise for this are borne by the quality label user.

1.3.3.4. If a test proves to be negative or a quality-controlled product is rejected, the relevant Quality Committee arranges for the test to be repeated. The quality label user can likewise demand a repeat test to be undertaken.

1.3.3.5. A test report is to be issued by the appointed tester for each test result. The association and the quality label user each obtain a copy.

1.3.3.6. If quality controlled products are unjustifiably rejected, then the organisation that has rejected them bears the cost of the test; if they have been justifiably rejected, then the respective quality label user bears the cost.

1.3.4. Penalties for deficiencies

1.3.4.1. If deficiencies in the quality control are established by the relevant Quality Committee, it will propose penalties to the Managing Committee of the "European Association for Panels and Profiles". These depend on the severity of the deficiency:

1.3.4.1.1. Additional requirements in the context of FPC

1.3.4.1.2. Increase in audit testing

1.3.4.1.3. Warning

1.3.4.1.4. Contractual penalty in a sum of up to € 5,000,

1.3.4.1.5. Time-limited or permanent withdrawal of the label.

1.3.4.2. The measures stated under section 1.3.4.1. can be linked together.

1.3.4.3. The party concerned is to be given a hearing in all cases.

1.3.4.4. In urgent cases, the President of the "European Association for Panels and Profiles" can provisionally withdraw the quality label with immediate effect. This must be confirmed within 14 days by the Managing Committee of the "European Association for Panels and Profiles".

1.3.5. Complaints

1.3.5.1. Quality label users can appeal to the relevant Quality Committee against penalty decisions within 4 weeks of their issue.

1.3.5.2. The appeal must be replied in the next scheduled meeting of the relevant Quality Committee under condition it arrives 4 weeks before this meeting.

1.3.5.3. If the relevant Quality Committee rejects the appeal, then the person lodging the appeal has the right to take legal action within 4 weeks of the issue of the decision.

1.3.6. Re-award

If the right to use the label is withdrawn, the right to the use of the label can be reinstated following a successful re-examination. The procedure is in accordance with section 2. The board on proposal of the relevant Quality Committee of the "European Association for Panels and Profiles" can, however, impose additional conditions.

1.4. Content of the Certification Document (CD)

CONTENT		PANELS	PROFILES
FRONT PAGE	Manufacturer	X	X
	Production plant (only if the manufacturer has the production plants at a different address)	X	X
	Panel[1]/Profile Types [1] The criteria, in base of which panels can be organized in relevant families to be part of the same CD are: - The category of the core material (PUR, MW, EPS etc.); - The face material (e.g. steel, aluminium); - The plant, if there are different plants producing the same product.	X	X
	Date of issuing	X	X
	Certification Number(s) – The Quality Label EPAQ shall be used only in combination with this certification number(s).	X	X
	Number of pages contained	X	X
	Rule for awarding the Quality Certificate and the Quality Label EPAQ: "The Quality Certificate is awarded only after the first EQC (External Quality Control), if the requirements of this Certification Document are fulfilled."	X	X
	General	X	X
	Panel/Profile[1] types and definition of used materials	X	X
	[1] The manufacturer has to state which profiles are only for decking purposes, because the test for determination of resistance to concentrated forces is necessary for decking products only.		X
	Panel/Profile types	X	X
	Characteristics and composition	X	X
	Deck layers – the metallic coating has not to be mentioned, because it is defined by the certification documents of the base material; - used tolerances (e.g. for Steel, normal or special tolerances, according to EN 10143); - the relevant standard for the used coating (e.g. organic coating according to EN 10169)	X	
	Sheets (Steel, Aluminium etc.)		X
	Core material – the same name of the foam dispensing as the one specified in the fire test report shall be used in the Certification Document	X	
	Corrosion protection system		X
	Glue – the same name of the glue as the one specified in the fire test report shall be used in the Certification Document	X	

	Panels – the tolerance of the panel thickness shall be listed	X	
Declared characteristic values shall be given to either two or three significant figures	Material safety factors and wrinkling stresses (see below table 4 to table 6)	X	
	Resistance to concentrated forces		X
	Bending moment capacity	X	
	Reaction to fire - the reaction to fire class according to the Classification Report shall be mentioned (e.g. at least class C-s3,d0)	X	X
	External fire performance		X
	Water permeability	X	
	Air permeability	X	
	Water vapour permeability	X	
	Airborne sound permeability	X	
	Sound absorption	X	
	Walkability	X	
	Table 1: Thermal transmittance U-values (W/m^2K) – only λ-values shall be listed	X	
	Table 2: Requirements for the production control of the core material with faces (mechanical values)	X	
	Table 3: Long term shear values	X	
	Table 4: Material safety factors γ_M for panels	X	
	Table 5: Wrinkling stresses (MPa) for external faces	X	
	Table 6: Wrinkling stresses (MPa) for internal faces	X	
	Information about how to interpolate between different thicknesses of the panels	X	
	Drawings	X	X
	Signature of the IE of the association	X	X

Table 1.4: Content of the Certification Document

2. Quality Regulations for Panels

2.1. Requirements for material properties

2.1.1. Tensile strength of the panel

The threshold value of the tensile strength of the panel is defined to:

PUR/PIR, EPS/XPS: 0.06 MPa as a characteristic value (5 %-fractile)

For other core materials: 0.03 MPa as a characteristic value (5 %-fractile)

Note: The values are defined by reason of the different handling of durability testing. Known PUR/PIR, EPS/XPS shall be considered to satisfy the durability requirements without testing (for EPS/XPS only DUR 1 required), see EN 14509, chapter 5.2.3. Besides, there is currently no experience for these core materials with tensile strength less than 0.06 MPa.

For other core materials, durability testing is always required and therewith core materials with lower tensile strength are always included.

2.1.2. Reaction to fire

Panels must have a minimum class of reaction to fire behaviour of C-s3,d0.

The core material of the panel shall be tested according to EN ISO 11925-2 on the naked core with the result “pass” for the 30s exposure. Panels that do not pass this requirement cannot receive the Quality Label EPAQ.

2.2. Control of material properties

2.2.1. General

The control of the production of panels is carried out by means of the plant’s own production control and external control in accordance with the following stipulations of these regulations:

The manufacturer must conclude a control agreement with the association in order to bear the Quality Label EPAQ, who for his part must commission the appropriate third parties with the control task, in order to be able to observe the requirements in accordance with the Quality Regulations.

After ensuring that the third party fulfils the requirements according to 1.1.3., the association has to make a contract with the third parties chosen by the manufacturer to ensure that the quality assurance will be on the basis of these regulations.

The implementation of the inspections and the type of documentation are regulated by the Quality Committee for Panels, in agreement with the third parties which carry out the external control.

The reports of assessment and external quality control shall be retained for at least five years.

The third parties have to have meetings to coordinate their work if required by the association. These meetings ought to be held in combination with the meetings of the Quality Committee for Panels.

The third party has to check the components and their ratios of the foam in case of foamed panels. Third parties can compare the FPC records with the results of ITT. For the expertise and the regular checking, the third party and the independent expert need the code name of the foam and the names of all components.

2.2.2. Base material

If the finished product manufacturer buys base materials whose characteristics have already been determined in accordance with the provisions of the hENs, listed in the preface of these regulations and are declared by the base material supplier with an inspection certificate 3.1 according to EN 10204 for every batch, the finished product manufacturer's system requires only a document check to ensure that the characteristics meet the product manufacturer's

specifications, provided that the production process for the finished product does not change in an unfavourable way these characteristics.

A batch is defined in the respective product standard (e.g. EN 10346) and the batch has to be produced in the same production run.

The inspection certificate 3.1 shall contain the following data:

- Name of the coil coater / producer
- Coil no. or coil batch number
- Indication of the type and grade of material
- Indication of the nominal layer weight of the metallic protective layers in accordance with EN 10346 or of other certified layers
- Format and nominal sheet thickness (t_N) (in mm respectively)
- Coating system
- Weight of the metal protective layer (g/m²) determined in accordance with EN 10346
- Determined thickness of the organic coating visible side/rear side in µm
- Determined values of the mechanical material properties (see also EN 10346 for steel or EN 485-2 for aluminium)
- Yield strength or 0,2 %-proof strength (R_{eH}/$R_{p0,2}$) in N/mm²
- Tensile strength (R_m) in N/mm²
- Elongation A_{80} mm in %
- Zinc adhesion, required for metallized, organic coated steel for cold forming.

Otherwise, the material cannot be used for production and has to be rejected.

In case of not having an inspection certificate 3.1, all data mentioned above have to be determined by the manufacturer himself.

In case of an incomplete inspection certificate, not containing all data mentioned above, the missing data has to be determined by the manufacturer himself.

2.2.3. Initial Type Testing

2.2.3.1. General

All characteristics in Table 5 of EN 14509, where relevant, shall be subjected to ITT tests with the exception of fire performance when using the CWFT option, where measurement in accordance with C.3.1 of EN 14509 is required to ensure that the product meets the definition required for CWFT.

Interpolation of characteristic values is permitted between different panel thicknesses (e.g. 60 mm / 120 mm / 200 mm).

Families:

For certification under the EPAQ scheme, the evaluation can be done according to EN 14509, chapter 6.4. The definition of families is under responsibility of the expert of the association.

2.2.3.2. Additional requirements of the EPAQ scheme

Dimensional tolerances are subjected to ITT-tests with additional requirements of the European Association for Panels and Profiles, see Table 2.2.

2.2.3.3. Responsibility

The ITT tests must be done by third parties for testing according to 1.2.2. The evaluation and preparation of the evaluation report must be done by third parties for evaluation and assessment according to 1.2.3.

2.2.3.4. ITT tests

The ITT tests can be made in a laboratory or in a factory of the manufacturer. The presence of an independent representative of a third party is absolute necessary for calibration and supervision of the tests.

2.2.4. Initial Inspection and External Quality Control

2.2.4.1. General

Prior to the first external quality control, an initial inspection shall be conducted.

The standard inspection including audit-testing of samples is carried out at least twice a year in the factory of the quality label user based on the control agreement.

2.2.4.2. Responsibility

The initial inspection must be done by third parties for evaluation and assessment according to 1.2.3. and the external quality control tests must be done by third parties for testing according to 1.2.2.

2.2.4.3. Procedures

The external quality control needs to be conducted in accordance with the testing regime described in Table 2.3. Sampling and testing have to be done by a third party or can be done by the manufacturer in the presence and under the responsibility of a third party.

Per date of EQC and certification document, samples of one panel type (one combination of face geometry, one core type, one panel thickness) shall be taken out of running production by the third party. The taken panel types shall be varied in the course of time, to cover the range of production (including also roofs and walls, if relevant) and scope of the certification document.

An EQC of one manufacturer can be valid for both main applications (walls and roofs), for all types of face geometries, for all types of core material within the same category (e.g. all types of MW, all densities of PUR etc.) even though there are different certification documents.

The panels for controlling should be taken out of the running production by the third party.

If third parties observe that certified products were not produced during the whole 3 year period of validity, they have to report these types of problems to the Quality Committee for Panels.

In each panel production plant, the internal factory production control must be confirmed by external quality control at least twice a year. The responsible third party shall be physically present in the plant twice a year.

The record of the results of the factory production control must be submitted to the third party by the manufacturer.

The results of the external control are recorded in the evaluation report of the third party. The manufacturer and the secretariat of the association simultaneously receive one copy of the evaluation report.

The acceptance of evaluation of the results is incumbent upon the Quality Committee for Panels.

In case of inadequate test results within the framework of the external control, the responsible third party must inform the independent expert in the Quality Committee for Panels and the manufacturer must immediately initiate the necessary measures in order to remedy the defects.

2.2.4.4. Evaluation of test results for mechanical properties

No individual test result in external quality control shall be less than the value declared. Otherwise, additional samples need to be taken, tested and the 5 %-fractile value needs to be determined anew. The resulting characteristic value shall not be less than the declared value. Otherwise, the panel looses conformity with the quality label. For the anew determination of the 5%-fractile value, it may be assumed that k = 1,65.

2.2.4.5. Evaluation of test results for other properties

No individual test result in external quality control shall be less than the value declared. Otherwise, additional samples need to be tested.

2.2.4.6. Thermal insulation performance

The control of the thermal insulation performance of prefabricated core materials can also be the task of the manufacturer of the core material. The panel producer can use CE-marked mineral wool core materials without any further testing, if the CE-markings provide the λ values for the orientation used in the panel manufacturing process and these core material performances are controlled under responsibility of a third party, in system A. An external third party control for panels must be done.

2.2.5. FPC procedures

2.2.5.1. General

The manufacturer shall establish procedures to ensure that the stated values of all of the characteristics are maintained in accordance with chapter 6.3.5.2 and 6.3.5.3 of EN 14509. Table 2.3 shows the test methods which must be used for FPC and external control, the number of specimens and the frequency of FPC and external control.

2.2.5.2. FPC for safety in fire characteristics

FPC for safety in fire characteristics shall be carried out according to EN 14509, 6.3.5.3.

2.3. Additional information for panels

2.3.1. Values under control / needed for different applications of panels

No.	Type of test	External walls	Internal walls	Ceilings	Roofs
1	Density of core material	yes	yes	yes	yes
2	Cross-panel tensile strength (with faces)	yes	yes	yes	yes
3	Thickness of core	yes	yes	yes	yes
4	Mass of panel	yes	yes	yes	yes
5	Compressive strength of core material	yes	yes	yes	yes
6	Shear strength and modulus of core material	yes	yes	yes	yes
7	Long term shear strength	no	no	yes	yes
8	Creep coefficient	no	no	yes	yes
9	Tensile strength and thickness of face material (or declaration)	yes	yes	yes	yes
10	- bending resistance in span and at internal support:				
	- positive bending	yes	yes	yes	yes
	- negative bending	yes	*	*	yes
	- wrinkling stresses:				
	- wrinkling stress, external face:				
	- in span	yes	yes	yes	yes
	- in span, elevated temperature	yes	*	*	yes
	- at internal central support	yes	yes	yes	yes
	- at internal central support, elevated temp.	yes	*	*	yes
	- wrinkling stress, internal face:				
	- in span	yes	yes	yes	yes
	- at internal central support	yes	yes	yes	yes
11	Dimensional tolerances	yes	yes	yes	yes
12	Resistance to point and access loads	n.a.	n.a.	yes	yes
13	Reaction to fire - certification	yes	yes	yes	yes
14	Durability and long term effects	yes	*	*	yes
15	External fire performance – certification	n.a.	n.a.	n.a.	yes
16	Thermal insulation performance	yes	*	*	yes

*: optional n.a.: not applicable

Optional: if declared, then under control

17	- bending resistance in span and at internal support:				
	- positive bending, elevated temperature		yes	yes	
	- negative bending, elevated temperature		yes	yes	
	- wrinkling stresses:				
	- wrinkling stress, internal face:				
	- in span, elevated temperature		yes	yes	
	- at internal central support, elevated temp.		yes	yes	
18	Resistance to fire – certification	yes			
19	Thermal insulation performance		yes		
20	Water permeability	yes			
21	Air permeability	yes			
22	Airborne sound insulation	yes			
23	Sound absorption	yes			
24	Durability and long term effects		yes		

Table 2.1: Values under control / needed for different applications of panels

2.3.2. Dimensional tolerances, test specimens, type of the test and ITT conditions for panels

Dimensional tolerances	Figure	Test method	Type of test	Min. number of ITT specimens	Compliance criteria and specific conditions
		EN 14509: Annex D	ITT	1	
			Values of EN 14509		**New values according to the EPAQ scheme**
Thickness of the panel	2.1	D.2.1	D ≤ 100 mm ± 2 mm D > 100 mm ± 2 %		
Deviation from flatness (according to the length of measurement L)	2.2	D.2.2	L [mm] 200 400 ≥700 Max. deviation from flatness [mm]: 0,6 1,0 1,5		L [mm] ≤200 400 ≥700 Max. deviation from flatness [mm]: 0,4 0,7 1,0 Intermediate values may be interpolated
Depth of metal profile	2.3	D.2.3	5 mm < h ≤ 50 mm ± 1 mm 50 mm < h ≤ 100 mm ± 2,5 mm		
Depth of stiffeners on lightly profiled faces	2.4	D.2.4	d_s ≤ 1 mm ± 30 % of d_s 1 mm < d_s ≤ 3 mm ± 0,3 mm 3 mm < d_s ≤ 5 mm ± 10 % of d_s		Compliance has to be proofed only by a measuring rule and a precision gauge.
Length of the panel	2.5 and 2.6	D.2.5	L ≤ 3000 mm ± 5 mm L > 3000 mm ± 10 mm		L ≤ 6 m: ± 5 mm L > 12 m: ± 10 mm Intermediate values may be interpolated
Cover width of the panel	2.7 ÷ 2.10	D.2.6	± 2 mm		
Deviation from squareness	2.11	D.2.7	s ≤ 0,006 x w		0,006 x w (roof) 0,004 x w (wall)
Deviation from straightness (on length)	2.12	D.2.8	1,0 mm / m not exceeding 5 mm		
Bowing (curvature on length or width)	2.13	D.2.9	2,0 mm / (m length) ≤ 10 mm 8,5 mm / (m width for flat profiles, h ≤ 10 mm) 10,0 mm / (m width for other depth, h > 10 mm)		
Pitch of the profile	2.14, 2.15	D.2.10	h ≤ 50 mm ± 2 mm h > 50 mm ± 3 mm		± 1,5 mm

Width of the ribs (b_1) and Width of the valleys (b_2)	2.16	D.2.11	Ribs: ± 1 mm Valleys: ± 2 mm	
Alignment	2.17	EPAQ scheme	-	$\Delta e \leq 3$ mm Δe: difference (overlapping) between inner and outer sheet at the joint ($\lvert e_o - e_U \rvert$) (The reference point of e_u and e_o has to be adapted to the individual geometry under responsibility of the third party)
Difference in measured thickness of joint			-	$\Delta D \leq 2$ mm ΔD: difference of the panel thicknesses D_{right} and D_{left} at the both edges
Longitudinal edge length	2.18		-	$h_u \geq 10$ mm
Edge waviness			-	W = ± 2 mm over 500 mm length

Table 2.2: Dimensional tolerances, test specimens, type of the test and ITT conditions for panels

2.3.3. Dimensions of panels (examples for measurement)

2.3.3.1. Thickness of the panel (D)

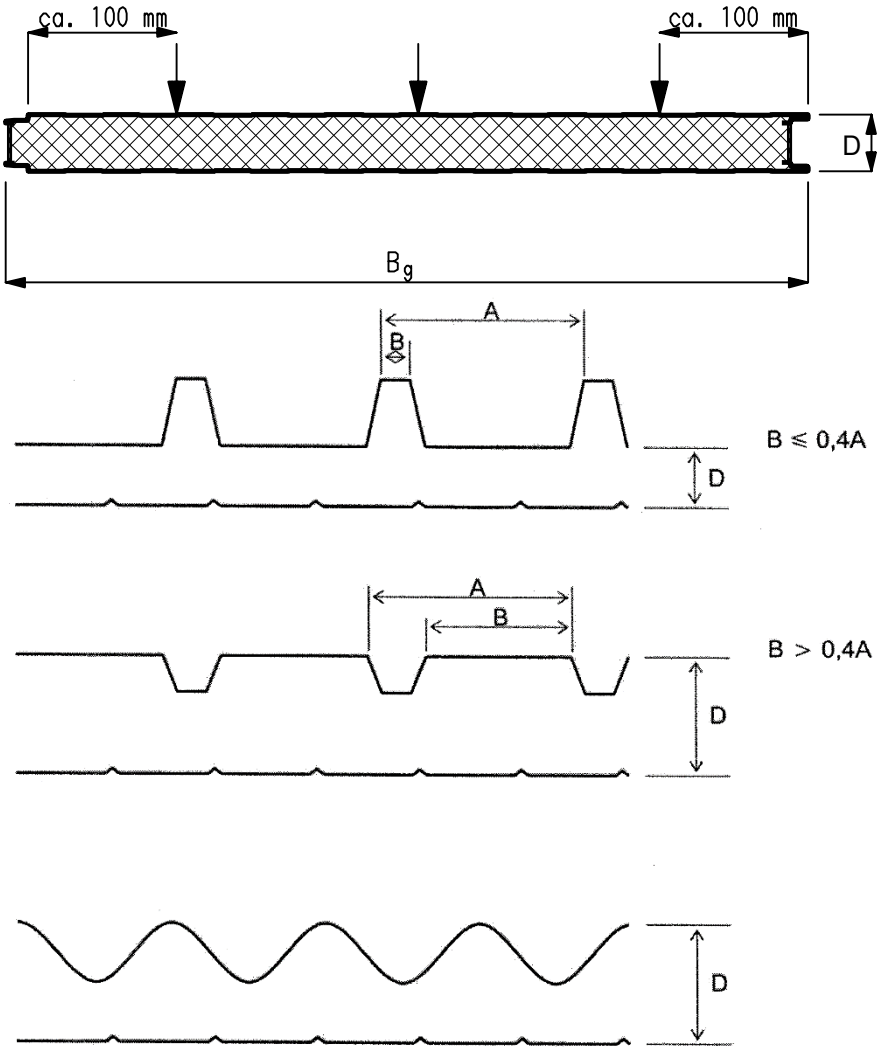

Figure 2.1. Measuring points for thickness measurement

2.3.3.2. Deviation from flatness (according to the length of measurement L)

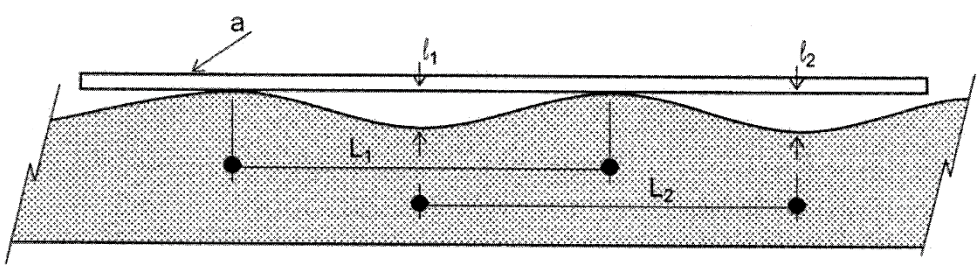

Figure 2.2. Flatness

2.3.3.3. Depth of metal profile (h)

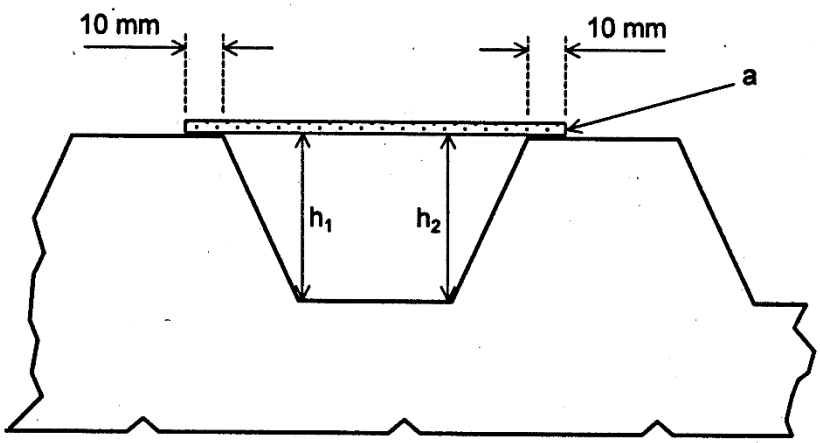

Figure 2.3. Dimensional check for depth of profile h

2.3.3.4. Depth of stiffeners on lightly profiled faces (d_s)

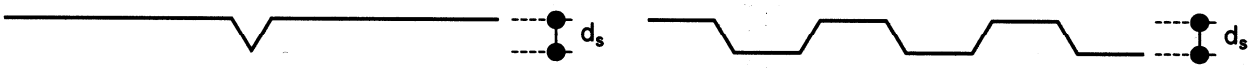

Figure 2.4. Depth of stiffeners and light profiling

2.3.3.5. Length of the panel (L)

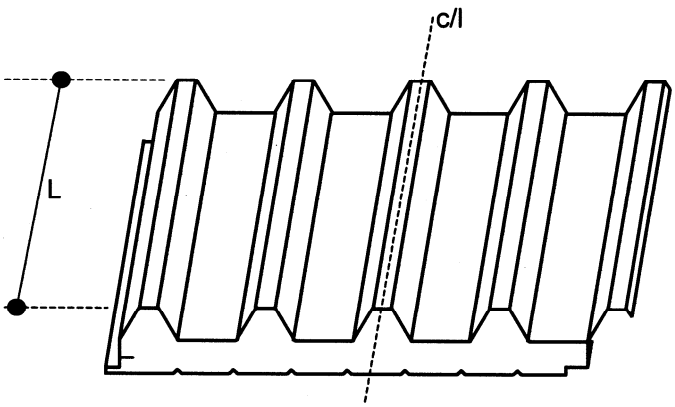

c/l – center line of the panel

Figure 2.5. Length (measurement on a roof panel, on the center rib)

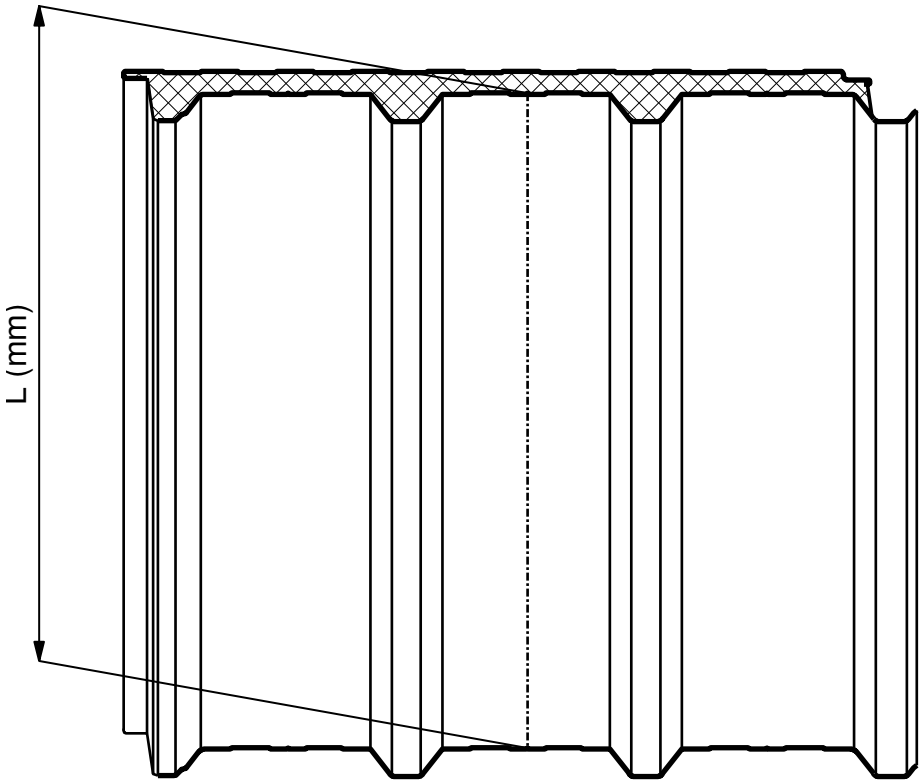

Figure 2.6. Length (measurement on a roof panel, on the center valley)

2.3.3.6. Cover width of the panel (w)

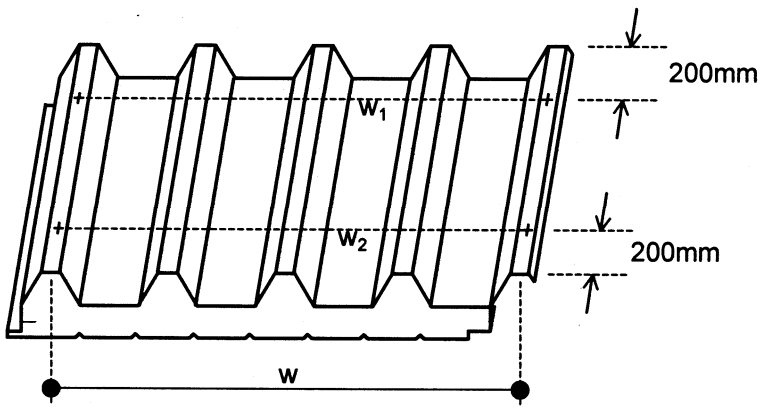

Figure 2.7. Cover width (w) of profiled panels

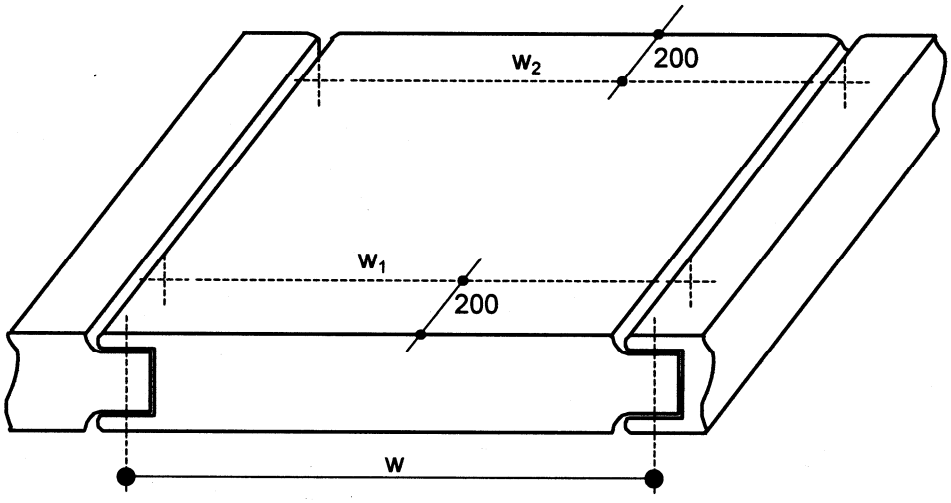

Figure 2.8. Cover width (w) in case of male-female joint

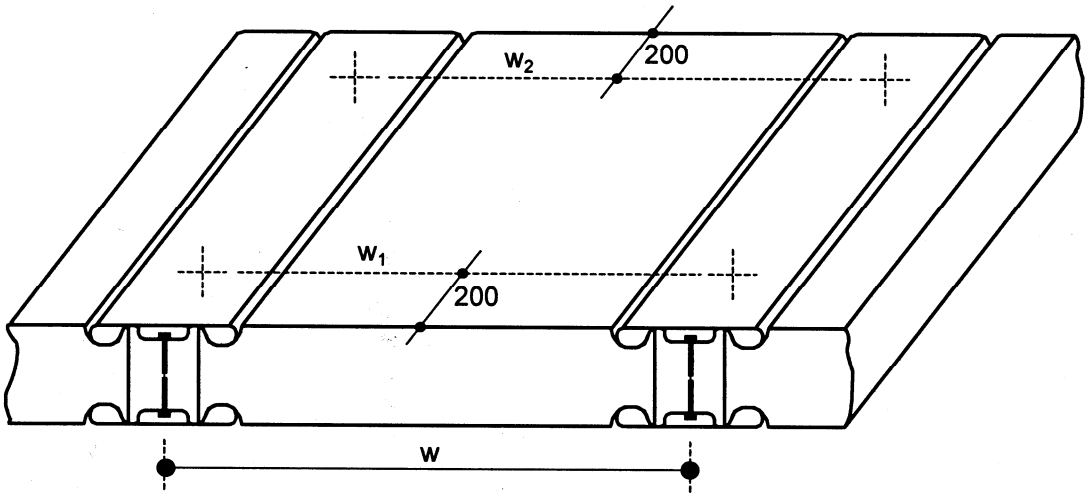

Figure 2.9. Measurement of cover width (w)

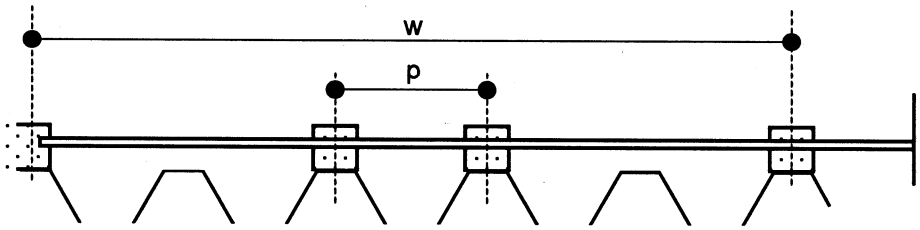

Figure 2.10. Dimensional check for cover width w and pitch p using a calibrated gauge

2.3.3.7. Deviation from squareness (s)

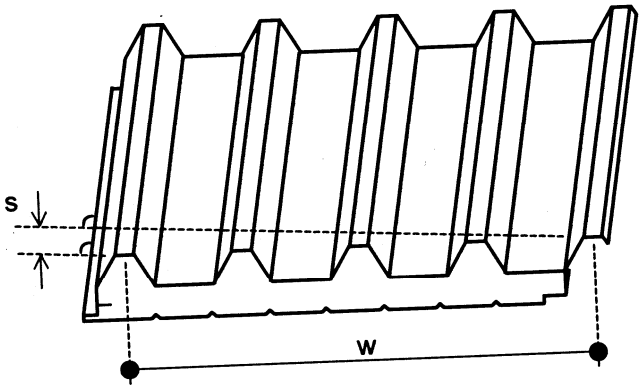

Figure 2.11. Squareness

2.3.3.8. Deviation from straightness - on length

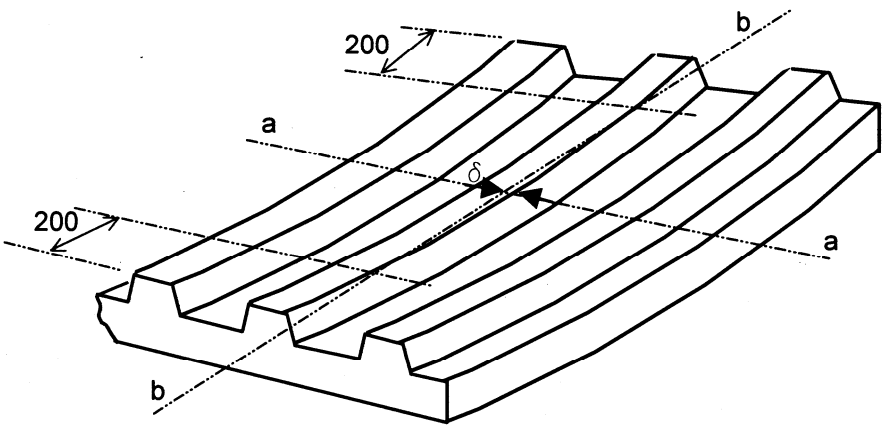

Figure 2.12. Deviation of straightness

2.3.3.9. Bowing or curvature on length or width (b)

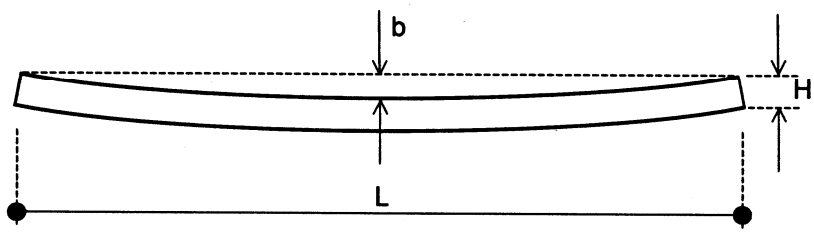

Figure 2.13. Panel bowing

2.3.3.10. Pitch of the profile (p)

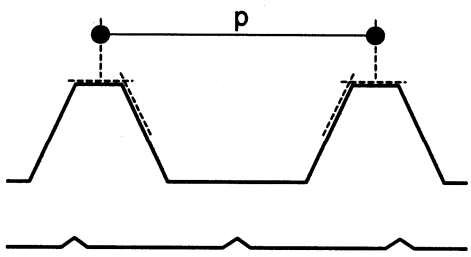

Figure 2.14. Pitch (p)

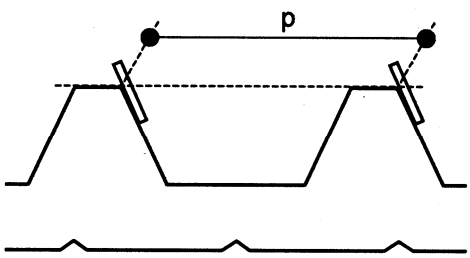

Figure 2.15. Dimensional check for pitch

2.3.3.11. Width of the ribs (b1) and width of the valleys (b2)

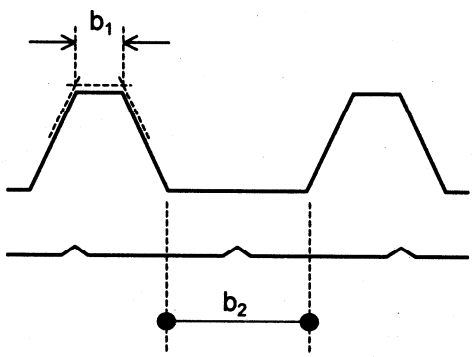

Figure 2.16. Widths of rib and valley

2.3.3.12. Alignment and difference in measured thickness of joint

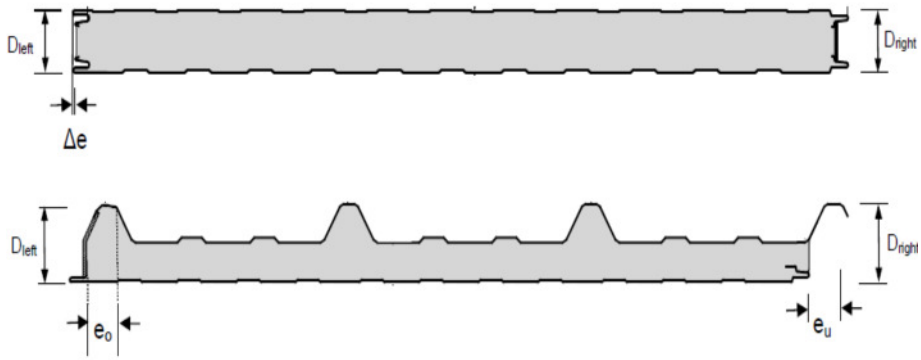

Figure 2.17. Alignment and difference in measured thickness of joint

2.3.3.13. Longitudinal edge length and edge waviness

A

Detail A:

Figure 2.18. Edge waviness

2.3.4. FPC and external control procedures for panels

Type of test	Test method (EN 14509 / EPAQ scheme)	FPC		External control twice a year
		Minimum number of specimens	Minimum frequency	Number of specimens
Density of core material	A.8	3	1 per shift/ 6 or 8h[a]	6
Cross-panel tensile strength and modulus (with faces)	A.1	3	1 per shift/ 6 or 8h[a]	10
Compressive strength and modulus of core material	A.2	3	1 per week[a]	10
Shear strength and modulus of core material[e]	A.3	3	1 per week[a]	10
Tensile strength of face material (or declaration – 2.2.2.)	-	3	All deliveries	3
Thickness of face material (or declaration – 2.2.2.)	-	3	All deliveries	3
Shear strength and modulus of the core material based on the testing of a complete panel[b]	A.4	1	1 per 2 weeks[a]	1
Wrinkling stress (optional see Note 3)	A.5	1	1 per week[a]	1
Dimensional control: Panel thickness Deviation from flatness Depth of profile Depth of stiffeners Length of panel Cover width Deviation from squareness Deviation from straightness Bowing (curvature) Pitch of profile Width of valleys/ribs Alignement Difference in measured thickness of joint Longitudinal edge length Edge waviness	 D.2.1 D.2.2 D.2.3 D.2.4 D.2.5 D.2.6 D.2.7 D.2.8 D.2.9 D.2.10 D.2.11 EPAQ EPAQ EPAQ EPAQ	1	1 per shift/ 6 or 8h	1
Reaction to fire - certification (EN 14509, 6.3.5.3)[c]	C.1.2.2 a)	1 set	1/week	-
Resistance to fire - certification (EN 14509, 6.3.5.3)[c]	-	-	Specification record	
External fire performance - certification (EN 14509, 6.3.5.3)[c] or CWFT				
Thermal insulation performance – EN 14509, 5.2.2	A.10.2.1.1[d]	1	1 per month	1
Durability – EN 14509, 5.2.3.1	-	-	Specification record	-
Water permeability – 5.2.6 Air permeability – 5.2.7 Water vapour permeability – 5.2.8	Visual inspection[a]	-	-	-

Table 2.3: FPC and external control procedures for panels

Table 2.3 (continued)

[a] Where production volumes are below 2 000 m² per shift, the manufacturer shall only test every 2 000 m² or at least every three months. Dimensional control tests and permeability inspections however shall be carried out every shift.

[b] Alternative test method instead of A.3 on condition that the ITT-tests have to be made in the same way.

[c] Manufacturer's specification record (see 6.3.5.3) or supplier's statement of fire performance of components.

[d] Procedure tests λ_l (single test result of thermal conductivity) in accordance with the appropriate product standard for the core material (A.10.2.1.1).

NOTE 1 The control of the thickness of pre-formed core material or lamellas and the positioning of the joints between individual slabs are of fundamental importance and should be frequently checked (e.g. every 2 h).

NOTE 2 Typical allowable difference in cutting thickness between adjacent pre-manufactured pieces for fabrication with stiff platens is ± 0,5 mm.

NOTE 3 If the wrinkling stress is controlled at least once per week it is not necessary to control the tension and compression moduli.

3. Quality Regulations for Profiles

3.1. Requirements for material properties

3.1.1. Nominal thickness

The nominal thickness of the self-supporting metal sheet (excluding any organic, inorganic or multi-layer coating), as defined in the relevant material standards listed in EN 506, EN 508-1, EN 508-2 and EN 508-3, shall be for all applications equal to or greater than:

- Aluminium: 0,7 mm
- Stainless steel: 0,7 mm
- Steel: 0,6 mm

3.1.2. Reaction to fire

Metallic coated steel sheet, profiled or flat, fulfils the requirements regarding reaction to fire under the EPAQ scheme when coated on the surface exposed to the fire with a coating of maximum nominal thickness 200 µm and having a coating mass ≤ 300 g/m^2 and a PCS ≤ 7,0 MJ/m^2. The steel sheet surface not exposed to the fire may have an organic coating, provided that this coating has a thickness ≤ 15 µm and a PCS ≤ 0,7 MJ/m^2. Organic coatings exceeding these limits require a classification according EN 13501-1 and shall have a minimum class of reaction to fire behaviour of C-s3, d0.

3.2. Control of material properties

3.2.1. General

The control of the production of profiles is carried out by means of the plant's own production control and external control in accordance with the following stipulations of these regulations.

The manufacturer must conclude a control agreement under the EPAQ scheme in order to bear the Quality Label EPAQ, who for his part must commission the appropriate third parties with the control task, in order to be able to observe the requirements in accordance with the Quality Regulations.

After ensuring that the third party fulfils the requirements according to chapter 1, the association has to make a contract with the third parties chosen by the manufacturer to ensure that the quality assurance will be on basis of these regulations.

The implementation of the inspections and the type of documentation is regulated by the Quality Committee for Profiles in agreement with the third parties which carry out the external control.

The reports of assessment and external quality control shall be retained for at least five years.

The third parties have to have meetings to coordinate their work if required by the Quality Committee for Profiles. These meetings ought to be held in combination with the meetings of the Quality Committee for Profiles.

3.2.2. Base material

If the finished product manufacturer buys base materials whose characteristics have already been determined in accordance with the provisions of the hENs listed in the preface of these regulations and are declared by the base material supplier with an inspection certificate 3.1 according to EN 10204 for every batch, the finished product manufacturer's system requires only a document check to ensure that the characteristics meet the product manufacturer's specifications, provided that the production process for the finished product does not change in an unfavourable way these characteristics.

A batch is defined in the respective product standard (e.g. EN 10346) and the batch has to be produced in the same production run.

The inspection certificate 3.1 shall contain the following data:

- Name of the coil coater / producer
- Coil no. or coil batch number
- Indication of the type and grade of material
- Indication of the nominal layer weight of the metallic protective layers in accordance with EN 10346 or of other certified layers
- Format and nominal sheet thickness (t_N) (in mm respectively)
- Coating system
- Weight of the metal protective layer (g/m²) determined in accordance with EN 10346
- Determined thickness of the organic coating visible side/rear side in µm
- Determined values of the mechanical material properties (see also EN 10346 for steel or EN 485-2 for aluminium)
- Yield strength or 0,2 %-proof strength ($R_{eH}/R_{p0,2}$) in N/mm²
- Tensile strength (Rm) in N/mm²
- Elongation A_{80} mm in %
- Zinc adhesion, required for metallized, organic coated steel for cold forming.

Otherwise, the material cannot be used for production and has to be rejected.

In case of not having an inspection certificate 3.1, all data mentioned above have to be determined by the manufacturer himself.

In case of an incomplete inspection certificate, not containing all data mentioned above, the missing data has to be determined by the manufacturer himself.

3.2.3. Initial Type Testing

3.2.3.1. General

All characteristics in Table 2 and 3 of EN 14782 or chapter 6.2 and Table 1 of EN 1090, where relevant, shall be subjected to ITT tests with the exception of fire performance when using the CWFT option, where measurement in accordance with C.3 of EN 14782 is required to ensure that the product meets the definition required for CWFT.

3.2.3.2. Additional requirements of the European Association for Panels and Profiles

Dimensional tolerances are subjected to ITT-tests with additional requirements of the European Association for Panels and Profiles, see Table 3.3 to 3.7.

3.2.3.3. Responsibility

The ITT tests must be done by third parties for testing according to 1.2.2. The evaluation and preparation of the evaluation report must be done by third parties for evaluation and assessment according to 1.2.3.

3.2.3.4. ITT tests

The ITT tests shall be made in a recognized laboratory. Alternatively, the ITT tests can be performed in a not-recognized laboratory; in this case, the presence of an independent representative of a third party is mandatory for calibration and supervision of the tests.

3.2.4. Initial Inspection and External Quality Control

3.2.4.1. General

Prior to the first external quality control, an initial inspection shall be conducted.

The external quality control including audit-testing of samples is carried out at least twice a year in the factory of the quality label user, based on the control agreement.

3.2.4.2. Responsibility

The initial inspection must be done by third parties for evaluation and assessment according to 1.2.3. and the external quality control tests must be done by third parties for testing according to 1.2.2.

3.2.4.3. Procedures

The external quality control needs to be conducted in accordance with the testing regime described in Table 3.8 and 3.9. The necessary samples are to be taken from the production process. Sampling and testing have to be done by a third party or can be done by the manufacturer in the presence and under the responsibility of a third party.

In each profile production plant, the internal factory production control must be confirmed by external quality control at least twice a year. The responsible third party shall be physically present in the plant twice a year.

The record of the results of the factory production control must be submitted to the third party by the manufacturer.

The efficiency of an existing quality management system must be shown by certificate or has to be checked by the third party according to clause 1.2.1.2.

In the case of external quality control, samples from the current production process must be selected in such a way that all profiles are checked in the course of three years period of validity.

The results of the external control are recorded in the evaluation report of the third party. The manufacturer and the secretariat of the association simultaneously receive one copy of the evaluation report.

The acceptance of evaluation of the results is incumbent upon the Quality Committee for Profiles.

In case of inadequate test results within the framework of the external control, the responsible third party must inform the independent expert in the Quality Committee for Profiles and the manufacturer must immediately initiate the necessary measures in order to remedy the defects.

3.2.4.4. Evaluation of test results for mechanical properties

No individual test result in external quality control shall be less than the value declared. Otherwise, additional samples need to be taken, tested and the 5 %-fractile value needs to be determined anew. The resulting characteristic value shall not be less than the declared value. Otherwise, the profile looses conformity with the quality label. For the anew determination of the 5%-fractile value, it may be assumed that k = 1,65.

3.2.4.5. Evaluation of test results for other properties

No individual test result in external quality control shall be less than the value declared. Otherwise, additional samples need to be tested.

3.2.5. FPC procedures

3.2.5.1. General

The manufacturer shall establish procedures to ensure that the stated values of all of the characteristics are maintained in accordance with chapter 6.3 of EN 14782 or chapter 6.3 of EN 1090. Table 4 and 5 of EN 14782 or Table 2 of EN 1090 show the test methods which must be used for FPC and external control, the number of specimens and the frequency of FPC and external control.

3.2.5.2. FPC for safety in fire characteristics

FPC for safety in fire characteristics shall be carried out according to EN 14782, Table 5.

3.2.6. Measurement of tolerances

3.2.6.1. General

The measurements are carried out in accordance with the FPC and the external control procedures.

3.2.6.2. Materials

For the inspection of the material properties required for the base material, see 3.2.2.

3.2.6.3. Sheet thickness

The measurement of the steel sheet thickness is carried out in accordance with EN 10143 and indeed prior to the cold forming, see also Table 3.8. In the relevant cases, the special requirements of metal coating have to be considered.

If measurements are made on profiled sheet, then the measurement of the sheet thickness is carried out at least on 3 measuring points on one end of profile, see chapter 3.4., Figure 3.2, 3.13, 3.23. The average value is deemed to be the sheet thickness but no individual value should be beneath the stipulated permissible minus dimension.

3.2.6.4. Trapezoidal profiles

3.2.6.4.1. General information

The inspection of the dimensional accuracy of the dimensions of the trapezoidal profiles is carried out on the basis of spot checks in accordance with the following regulations during the manufacturing process: All the measurements are carried out 200 mm away from an end of profile, if nothing else is indicated.

3.2.6.4.2. Depth of profile h

The distance between the surfaces of the same side of the upper and lower flange is deemed as being the depth of profile h.

The measurement is carried out in accordance with Chapter 3.4, Figure 3.4 and 3.5.

3.2.6.4.3. Pitch of the profile p

The pitch of the profile p shall be the distances between the centres of adjacent ribs, measured at 200 mm from sheet ends, see Chapter 3.4, Figure 3.10.

3.2.6.4.4. Cover width w

The cover width w indicates the modular dimension for the width. It is stated by the manufacturer.

The cover widths w_1 and w_2 are measured 200 mm from the sheet ends and w_3 is measured in the profile centre of an evenly supported structural member, see Chapter 3.4, Figure 3.6.

3.2.6.4.5. Cover width difference of the profile w_3

The third measurement w_3 of cover width shall be made across the centre line of the sheet (see 3.2.6.4.4) to determine the cover width difference of the profile. This w_3 measurement shall be within the stated tolerance referred to the average value for w_1 and w_2.

3.2.6.4.6. Width of crown and valley

The widths of crown and valley b must be measured on all the profile ribs, see Chapter 3.4, Figure 3.1.

3.2.6.4.7. Radius of bends r

The measurement of the radius is carried out on the inside of the bend in accordance with the positions displayed in Chapter 3.4, Figure 3.7.

3.2.6.4.8. Position of flange stiffeners b_k and depth of flange stiffeners h_r

The position b_k and the height h_r must be measured on all crowns, see Chapter 3.4, Figure 3.1.

3.2.6.4.9. Position of web stiffeners h_a, h_b

With respect to the position h_a, h_b, the vertical distance of the start of the web from the external surface of the upper or lower flange applies, see Chapter 3.4, Figure 3.1.

The length h_{sa}, h_{sb}, see Chapter 3.4, Figure 3.1, is the calculated difference between the vertical distances from the start and end of the web and the external surface of the upper or lower flange that has been measured. The distance of the neighbouring parallel displaced web surfaces applies as the displacement v_{sa}, v_{sb}, see Chapter 3.4, Figure 3.1, measured between the respective sheet external and internal surfaces.

In the case of profiles with sectional differing web inclines, the average value from the two measurements from both sides of the web applies as the displacement.

3.2.6.4.10. Crown curvature h_e

The crown curvature h_e must be measured on all crowns, see Chapter 3.4, Figure 3.1.

3.2.6.4.11. Length of the profile l

The length of the profile l must be determined on the middle rib on the profile, see Chapter 3.4, Figure 3.6.

3.2.6.4.12. Deviation from squareness S

The determination of the deviation from squareness S must be controlled in accordance with Chapter 3.4, Figure 3.9.

3.2.6.4.13. Longitudinal edge up stand h_u

The longitudinal edge up stand h_u is measured on the longitudinal edge, see Chapter 3.4, Figure 3.1.

3.2.6.4.14. Deviation of side lap D

The deviation of side lap D is defined in Chapter 3.4, Figure 3.3. It is determined by means of the straightness of the longitudinal edge.

3.2.6.4.15. Longitudinal edge width b_{uf}

In the case of lower profile flange with the transverse bead, the dimension b_{uf} must be agreed upon with the third party, otherwise it will be inspected on the
basis of the flange widths b_u in accordance with the existing formula, see Chapter 3.4, Figure 3.1 and Table 3.4.

3.2.6.4.16. Deviation from straightness δ

The deviation from straightness δ is measured on the longitudinal edge, see Chapter 3.4, Figure 3.8.

3.2.6.4.17. Position and dimension of perforation

The position and dimension of perforation of acoustic trapezoidal profiles must be inspected in accordance with Chapter 3.4, Figure 3.11.

3.2.6.4.18. Flatness of unstiffened or stiffened flange or web

If deviations from flatness in longitudinal direction of the element are visible, then the deviation Δ has to be measured, see Chapter 3.4, Figure 3.12.

3.2.6.4.19. Curvature of flange

If a curvature of flange is visible, then the deviation Δ has to be measured, according to EN 1090-2.

3.2.6.5. Sinusoidal profiles

3.2.6.5.1. General information

The inspection of the dimensional accuracy of the dimensions of the sinusoidal profiles is carried out on the basis of spot checks in accordance with the
following regulations during the manufacturing process: All the measurements are carried out 200 mm away from a profile end, if nothing else is indicated.

3.2.6.5.2. Depth of profile h

The distance between crowns and valleys is deemed as being the depth of profile h.

The measurement is carried out in accordance with Chapter 3.4, Figure 3.14, by means of the application of a measuring aid upon the wave high points. The measurement is carried out to the wave trough.

3.2.6.5.3. Pitch of the profile p

The pitch of the profile p shall be the distances between the centres of adjacent waves, measured at 200 mm from sheet ends, see Chapter 3.4, Figure 3.15.

3.2.6.5.4. Cover width w

The cover width w indicates the distance of the high points of both external waves.

The cover widths w_1 and w_2 are measured 200 mm from the profile ends and w_3 is measured in the profile centre of an evenly supported structural member respectively. The cover width is determined at the upper side of the profile, see Chapter 3.4, Figure 3.16.

3.2.6.5.5. Cover width difference of the profile w_3

The third measurement w_3 of cover width shall be made across the centre line of the sheet (see 3.2.6.5.4) to determine the cover width difference of the profile. This w_3 measurement shall be within the stated tolerance referred to the average value for w_1 and w_2.

3.2.6.5.6. Radius of bends r

The measurement of the radius is carried out at the positions shown in Chapter 3.4, Figure 3.17 for each indicated wave on the upper and lower side of the profile by means of radius gauges.

3.2.6.5.7. Deviation from squareness S

The determination of the deviation from squareness S must be controlled in accordance with Chapter 3.4, Figure 3.19.

3.2.6.5.8. Length of the profile l

The length of the profile l must be determined on the middle rib on the profile, see Chapter 3.4, Figure 3.18.

3.2.6.5.9. Deviation of side lap D

The deviation of side lap D is defined in Chapter 3.4, Figure 3.20. It is determined by means of the straightness of the longitudinal edge.

3.2.6.7. Cassettes and liner trays

3.2.6.7.1. General information

The inspection of the dimensional accuracy is carried out on the basis of spot checks in accordance with the following regulations during the manufacturing process: All the measurements are carried out 200 mm away from a profile end, if nothing else is indicated.

3.2.6.7.2. Depth of profile h

The distance between the surfaces of the same side of the upper and lower flange is deemed as being the depth of profile h.

The measurement is carried out in accordance with Chapter 3.4, Figure 3.22 and 3.23.

3.2.6.7.3. Position of flange stiffeners b_k and depth of flange stiffeners h_r

The position b_k and the height h_r must be measured in accordance with Chapter 3.4, Figure 3.22.

3.2.6.7.4. Position of web stiffeners h_a, h_b and depth of web stiffeners v_{sa}, v_{sb}

The vertical distance of the stiffener from the external surface of the broad flange h_a, h_b and the depth of the stiffeners v_{sa}, v_{sb} must be measured according to Chapter 3.4, Figure 3.22.

3.2.6.7.5. Width of flanges b_s

The measurements are carried out on both flanges, see Chapter 3.4, Figure 3.22.

3.2.6.7.6. Cover width w

The cover widths w_1 and w_2 are measured 200 mm from the sheet ends and w_3 is measured in the profile centre of an evenly supported element, see Chapter 3.4, Figure 3.23 and 3.24.

3.2.6.7.7. Radius of bends r

The radius r is measured 200 mm from the sheet ends and in the profile centre in accordance with the positions displayed in Chapter 3.4, Figure 3.22.

3.2.6.7.8. Length of the profile l

The length of the profile l must be measured in the centre of the profile, see Chapter 3.4, Figure 3.24.

3.2.6.7.9. Deviation of side lap D

The deviation of side lap D is defined in Chapter 3.4, Figure 3.25. It is determined by means of the straightness of the longitudinal edge.

3.2.6.7.10. Longitudinal edge up stand s

The longitudinal edge up stand s is measured on the longitudinal edge, see Chapter 3.4, Figure 3.22.

3.2.6.7.11. Corner angle flange/web φ

The corner angle φ is measured according to Chapter 3.4, Figure 3.26.

3.2.6.7.12. Deflection of flange fs

The deflection of the narrow upper flange f_s may not exceed a maximum level of $l/300 \leq \pm 20$ mm, see Chapter 3.4, Figure 3.24.

3.2.6.7.13. Lateral curvature fq

The lateral curvature $\pm f_q$ has to be determined at the centre of a profile, which is supported at a distance interval L and attached at the points of support of the pressed down profile in the vertical fixed position with fixation of the webs in 90° (e.g. with a continuous cold formed angle), see Chapter 3.4, Figure 3.27.

3.2.6.7.14. Longitudinal corrugation fw

The longitudinal corrugation f_w is determined by means of the installation of an appropriate measuring device at the two highest peaks. The completed measurement to the deepest wave trough from the measuring line is the measurement value for the lengthwise waviness f_W, see Chapter 3.4, Figure 3.27.

3.2.6.7.15. Position and dimension of perforation

The position and dimension of perforation of acoustic profiles must be inspected in accordance with Chapter 3.4, Figure 3.28.

3.3. Additional information for profiles

3.3.1. Values controlled / needed for different applications

No.	Characteristic	External walls	Internal walls	Ceilings	Roofs
1	Quality of metal	yes	yes	yes	yes
2	Thickness of metal	yes	yes	yes	yes
3	Mechanical resistance Yield strength/grade of metal	yes	yes	yes	yes
4	Dimensional change (Declaration)	yes	yes	yes	yes
5	Durability/quality of the coating (Declaration)	yes	yes	yes	yes
6	Mechanical resistance Resistance to concentrated forces[1,2,3,4]	no	no	no	yes
7	Water permeability Vapour and air permeability (Visual assessment)	yes	yes	yes	yes
8	Dimensional tolerances	yes	yes	yes	yes
9	External fire performance – certification	no	no	no	yes
10	Reaction to fire – certification	yes	yes	yes	yes
11	Release of dangerous substances	Where required			

1. A span has to be stated, based on existing walkability tests or on the test of EN 14782. In case of existing documents for both alternatives, the larger span has to be stated (which usually comes from the test of EN 14782). Alternatively, each manufacturer can state a span of 400 mm without any tests - according to EN 14782.
2. Other tests, like walkability tests, may be sufficient to evaluate the resistance to concentrated forces. This evaluation has to be done by an independent expert of the Quality Committee for Profiles.
3. The report of the test for determination of resistance to concentrated forces has to be checked by the independent expert of the Quality Committee for Profiles. This independent expert writes a certification report that has to be the basis for the award of the Quality Label EPAQ.
4. Or according to special national requirements.

Table 3.1: Values controlled / needed for different applications

3.3.2. ITT procedures for base material

Type of test	Requirement clause of		Test method acc. to		Minimum number of specimens		
	EN 14782	**EN 1090-1**	**EN 14782**	**EN 1090**	**With traceability system but without base material manufacturer's inspection certificate[c] (only EN 14782)**	**With traceability system[d] and base material manufacturer's inspection certificate[c]**	**Compliance criteria and specific conditions**
Quality of metal[a]	4.1	-	Visual inspection	-	1	1	Manufacturer's declaration
Thickness	4.2	EN 1090-2 5.3.1 EN 1090-3 5.4	4.2	EN 1090-2, 5.3.1 EN 1090-3, 5.4	3	1[e]	Within the manufacturer's stated tolerance
Mechanical resistance Yield strength/grade of metal	4.3	4.5	EN 6892-1 EN 485-2	EN 1090-2, 5.3.1 EN 1090-3, 5.4	3	1[e]	Manufacturer's declaration
Dimensional change	4.6	-	-	-	-	-	Manufacturer's declaration
Durability/quality of coating	4.8	4.9	4.8	EN 1090-2, 5.3.1 EN 1090-3, 5.4	-	-	Declaration or compliance with appropriate national technical specification
Release of regulated dangerous substances	4.11	4.7	-	-	-	-[b]	As appropriate when national provisions exist

a This concerns the quality of the base material (no pin-holes, micro-holes, pits, etc.).

b In this case, the finished product manufacturer shall verify that the inspection certificate 3.1 in accordance with EN 10204 indicates that the base material (e.g. coils, sheets) has the characteristics that he need to produce the finished product.

c Inspection certificate 3.1 in accordance with EN 10204

d These tests shall be done by the finished product manufacturer.

e In this case, the finished product manufacturer shall verify that the inspection certificate 3.1 in accordance with EN 10204 indicates that the base material (e.g. coils, sheets) has the characteristics that he need to produce the finished product and shall perform additional test(s).

Table 3.2: ITT procedures for base material

3.3.3. ITT procedures for profiles

Type of test	Requirement clause of		Test method acc. to		Minimum number of specimens	Compliance criteria and specific conditions
	EN 14782	EN 1090-1	EN 14782	EN 1090-1		
Resistance to concentrated forces[a]	4.3	-	Annex B	-	B.5 of EN 14782	All test results ≥ manufacturer's stated value: a span compatible with a force of 1,2 kN
Weldability/Material[c]	-	4.3	-	5.4	1	Checking of inspection documents for compliance with the specified requirements to the constituent product
Water permeability	4.4	-	Visual inspections	-	Random	Pass
Dimensional tolerances: Initial set up of the manufacturing machines	4.7 and system EPAQ	1090-2, 4.1.4 1090-3, 4.1.3	EN 506, EN 508-1, EN 508-2 or EN 508-3	5.3 and system EPAQ	3	3 of minimum and maximum sheet thickness. All test results within the tolerances of the system EPAQ.
External fire performance[a]	4.9[b]	-	ENV 1187	-	See EN 13501-5	Classification in accordance with EN 13501-5
Reaction to fire	4.10[b]	4.6	EN 13501-1 and Annex C	5.8	See EN 13501-1	Classification in accordance with EN 13501-1
Dangerous substances	-	4.7	-	5.9	1	Checking that constituent products conform to European Standards
Durability	-	4.9	-	5.11	1	EN 1090-2, EN 1090-3

a Applies only to roofing products.
b For products requiring testing.
c Fracture toughness has to be mentioned in the ITT, even if it is not applicable to profiles

Table 3.3: ITT procedures for profiles

3.3.4. Dimensional tolerances for trapezoidal profiles, test specimens, type of the test and conditions

Title	Symbols	Test method acc. to EN 508 Annex D	Profiles without stiffeners Values of EN 508 and additional values (grey) of the EPAQ scheme	Profiles with stiffeners Values of EN 508 and additional values (grey) of the EPAQ scheme
Depth of profile	h	D.1.2	h ≤ 50 mm ± 1,0 mm 50 mm < h ≤ 100 mm ± 1,5 mm h > 100 mm ± 2,0 mm	
Depth of stiffeners	h_r v_s	D.1.3		+3 mm -1 mm +2 -0,15 x v ≤ 1 mm
Position of stiffeners	h_a, h_b, h_{sa}, h_{sb}, b_k			±3 mm
Pitch of the profile	p	D.1.4	h ≤ 50 mm ± 2,0 mm 50 mm < h ≤ 100 mm ± 3,0 mm h > 100 mm ± 4,0 mm	no requirement
Widths of crown and valley	b	D.1.5	+2 mm - 1 mm	+4 mm -1 mm
Cover width	$w_{1,2}$	D.1.6	h ≤ 50 mm ± 5,0 mm h > 50 mm ± 0,1 x h ≤ 15 mm	
Cover width difference	w_3		$(w_1 + w_2)/2$ - tolerance ≤ w_3 ≤ $(w_1 + w_2)/2$ + tolerance	
Radius of bends	r	D.1.7	+2 mm 0 mm	±2 mm
Deviation from straightness	δ	D.1.8	2,0 mm / m of sheet length not exceeding 10 mm	
Deviation from squareness	S	D.1.9	S ≤ 0,005 x w	no requirement
Length of the profile	l	D.1.10	L ≤ 3000 mm +10 mm -5 mm L > 3000 mm + 20 mm -5 mm	

Table 3.4: Dimensional tolerances for trapezoidal profiles, test specimens, type of the test and conditions

Title	Symbols	Test method acc. to EN 508 Annex D	Profiles without stiffeners Values of EN 508 and additional values (grey) of the EPAQ scheme	Profiles with stiffeners Values of EN 508 and additional values (grey) of the EPAQ scheme
Deviation of side lap	D	D.1.11	D ≤ ± 2,0 mm on a length of 500 mm	
Longitudinal edge up stand	h_u		$h_u \geq 10$ mm if h_u is defined: +5 mm -2 mm	
Longitudinal edge width	b_{uf}		$b_u \leq 30$ mm $b_u/2 + 5 \leq b_{uf} \leq b_u - 5$ $b_u > 30$ mm $20 \leq b_{uf} \leq b_u - 5$	
Crown curvature	h_e		± 3 mm	
Flatness of unstiffened or stiffened flange or web	Δ		Visual control	
Hole diameter	d_n		≤ ∅ 5 mm ± 0,2 mm > ∅ 5 mm + 0,2 mm -0,4 mm In case of additional coating after profiling, the measurement must be done without additional coating.	
Hole pitch	u_x		+ 2,0 / -1,0 mm	
Offset	V		± 2,0 mm	
Row spacing	u_y		± 2,0 mm	
Edge spacing	e_g, e_s		The minimum values to be complied will be specified during ITT	
Total number of rows (transversal direction)			± 0 The number must be specified by the manufacturer during ITT ± 3% In case of completely perforated sheets	
Total number of rows per meter (longitudinal direction)			± 3% The number must be specified by the manufacturer during ITT	

Table 3.4 (continued): Dimensional tolerances for trapezoidal profiles, test specimens, type of the test and conditions

3.3.5. Dimensional tolerances for sinusoidal profiles, test specimens, type of the test and conditions

Title	Symbols	Test method acc. to EN 508 Annex D	Values (grey) of the EPAQ scheme
Depth of profile	h		$h \leq 50$ mm ± 1,0 mm 50 mm < $h \leq 100$ mm ± 1,5 mm $h > 100$ mm ± 2,0 mm
Pitch of the profile	p		± 3,0 mm
Cover width	$w_{1,2}$		± 0,01 x b
Cover width difference	w_3		$w_3 \leq (w_1 + w_2)/2 \pm 5$ mm
Radius of bends	r		± 10%
Deviation from squareness	S		$S \leq 0{,}005 \times w$
Length of the profile	l		$L \leq 3000$ mm +10 mm -5 mm $L > 3000$ mm + 20 mm -5 mm
Deviation of side lap	D		$D \leq \pm 2{,}0$ mm on a length of 500 mm

Table 3.5: Dimensional tolerances for sinusoidal profiles, test specimens, type of the test and conditions

3.3.6. Dimensional tolerances for cassettes, liner trays, test specimens, type of the test and conditions

Title	Symbols	Test method acc. to EN 508 Annex D	Profiles without stiffeners Values of EN 508 and additional values (grey) of the EPAQ scheme	Profiles with stiffeners Values of EN 508 and additional values (grey) of the EPAQ scheme
Depth of profile	h	D.1.2	h ≤ 50 mm ± 1,0 mm 50 mm < h ≤ 100 mm ± 1,5 mm h > 100 mm ± 2,0 mm	
Depth of stiffeners	h_r v_s	D.1.3		+3 mm -1 mm +2 -0,15 x v ≤ 1 mm
Position of stiffeners	h_a, h_b, h_{sa}, h_{sb}, b_k			±3 mm
Widths of flanges	b_s	D.1.5	+2 mm - 1 mm	+4 mm -1 mm
Cover width	$W_{1, 2, 3}$	D.1.6	± 5,0 mm	
Radius of bends	r	D.1.7	+2 mm 0 mm	±2 mm
Length of the profile	l		L ≤ 3000 mm +10 mm -5 mm L > 3000 mm + 20 mm -5 mm	
Deviation of side lap	D	D.1.11	D ≤ ± 2,0 mm on a length of 500 mm	
Longitudinal edge up stand	s		-2 (if s is specified) ≥ 10 mm	
Deflection of flange	f_s		l/300 ≤ 20 mm	
Corner angle flange/web	φ		± 3°	
Lateral curvature	f_q		+ 0,02 x b ≤10 mm - 0,01 x b < 10 mm	
Longitudinal corrugation	f_w		b: 400 500 600 f_w: ± 2 mm ± 3 mm ± 5 mm	

Table 3.6: Dimensional tolerances for cassettes, liner trays, test specimens, type of the test and conditions

Title	Symbols	Test method acc. to EN 508 Annex D	Profiles without stiffeners Values of EN 508 and additional values (grey) of the EPAQ scheme	Profiles with stiffeners Values of EN 508 and additional values (grey) of the EPAQ scheme
Hole diameter	d_n		≤ ∅ 5 mm ± 0,2 mm > ∅ 5 mm + 0,2 mm -0,4 mm In case of additional coating after profiling, the measurement must be done without additional coating.	
Hole pitch	u_x		+2,0 / -1,0 mm	
Offset	v		± 2,0 mm	
Row spacing	u_y		± 2,0 mm	
Edge spacing	e_g, e_s		The minimum values to be complied will be specified during ITT	
Total number of rows (transversal direction)			± 0 The number must be specified by the manufacturer during ITT ± 3% In case of completely perforated sheets	
Total number of rows per meter (longitudinal direction)			± 3% The number must be specified by the manufacturer during ITT	

Table 3.6 (continued): Dimensional tolerances for cassettes, liner trays, test specimens, type of the test and conditions

3.3.7. Dimensional tolerances for tiles, test specimens, type of tests and conditions

Title	Symbols	Test method acc. to EN 508 Annex D	Values of EN 508
Depth of tile	h	D.3.2	± 2,0 mm
Web angular displacement	α	D.3.3	± 2°
Pitch		D.3.4	h ≤ 75 mm ± 1,5 mm h > 75 mm ± 1,5 mm or 2% of depth
Widths of crown and valley	b	D.3.5	± 1,0 mm
Cover width	$w_{1, 2, 3}$	D.3.6	± 0,005 x w
Radius of bends	r	D.3.7	± 1,5 mm
Deviation from straightness	δ	D.3.8	2,0 mm / m of sheet length not exceeding 9 mm
Deviation from squareness	S	D.3.9	± 6,0 mm
Length	l	D.3.10	± 2,0 mm on each step ± 6,0 mm on total length of the tile
Cover width difference	δ	D.3.11	± 2,0 mm/m length ≤ 9 mm

Table 3.7: Dimensional tolerances for tiles, test specimens, type of tests and conditions

3.3.8. FPC procedures for base material and external control

Type of test	Requirement clause of		Test method acc. to		FPC			External control twice a year
					Minimum number of specimens per batch		Compliance criteria and specific conditions	Number of specimens
	EN 14782	EN 1090-1	EN 14782	EN 1090-1	With traceability system but without base material manufacturer's inspection certificate[c] (only EN 14782)	With traceability system and base material manufacturer's inspection certificate[c]		
Quality of metal[a]	4.1	-	Visual assessment	-	1[d]	1[d]	Manufacturer's declaration	
Thickness	4.2 and system EPAQ	4.2	4.2	5.3	2[d]	1[d]	Manufacturer's declaration	
Mechanical resistance Yield strength/grade of metal	4.3	4.5	EN 6892-1 EN 485-2	5.2	1	-[b]	All test results ≥ manufacturer's stated value (acc. to EN 10346)	3 per type of profile max. 20 per year
Durability /quality of the coating	4.8	4.9	4.8 and measurement of the thickness of the coating	5.11	-	-[b]	Declaration or compliance with appropriate national technical specifications	3 per type of profile max. 20 per year
Release of regulated dangerous substances	4.11	-	-	-	-	-	As appropriate when national provisions exist	

a This concerns the quality of the base material (no pin-holes, micro-holes, pits, etc.).
b In this case, the finished product manufacturer shall verify that the inspection certificate in accordance with EN 10204 indicates that the base material (e.g. coils, sheets) has the characteristics that he need to produce the finished product.
c Inspection certificate 3.1 in accordance with EN 10204
d At each change of profile and change of sheet thickness

Table 3.8: FPC procedures for base material and external control

3.3.9. FPC and external control procedures for profiles

Type of test	Requirement clause of		Test method acc. to		FPC		External control twice a year
	EN 14782	EN 1090-1	EN 14782	EN 1090-1	Minimum number of specimens	Compliance criteria and specific conditions	Number of specimens
Resistance to concentrated forces[e]	4.3	-	Annex B	-	1 per year[d]	All test results ≥ manufacturer's stated value: a span compatible with a force of 1,2 kN (EN 14782)	1 per year[d]
Dimensional tolerances	4.7 and system EPAQ	4.2	See 4.7	5.3	At each change of profile or material and shift[a]	All test results within the tolerances of the EPAQ scheme	For each type of profile at 2 profiles for a thinner, a middle and a thicker gauge[c]
Water permeability	4.4	-	Visual inspections	--	Continuous	Pass	-
External fire performance[e]	4.9	-	-	-	- [b]	To ensure production remains representative of ITT samples	-
Reaction to fire	4.10	-	-	-	- [b]	To ensure production remains representative of ITT samples	-

a The profile shall be checked directly at the beginning of each production run, change of coil and/or new shift. The following geometrical characteristics shall be checked at the beginning of each run: the cover width, the height of the ribs, length of profile, the distance between two consecutives ribs, longitudinal edge width and type and position of perforated area. The radius of the profile, the position of the stiffeners, the height of stiffeners of any flat part, webs, the width of the flat part and the cut angle of the sheet have only to be checked during external control.

b No direct testing of these characteristics is needed. However, the manufacturer shall check, with a frequency to be defined in the FPC manual, sufficient to ensure that ITT results remain applicable to all products. When using CWFT or deemed-to-satisfy, indirect checks of product parameters may be needed.

c It is not necessary to check all profiles at each external control, it is sufficient to check each type of profile at least within a period of three years.

d No testing required for a given profile if the physical dimensions of the product are subject to regular checking.

e Applies only to roofing products.

Table 3.9: FPC and external control procedures for profiles

3.4. Dimensions of profiles

3.4.1. Dimensions of trapezoidal profiles

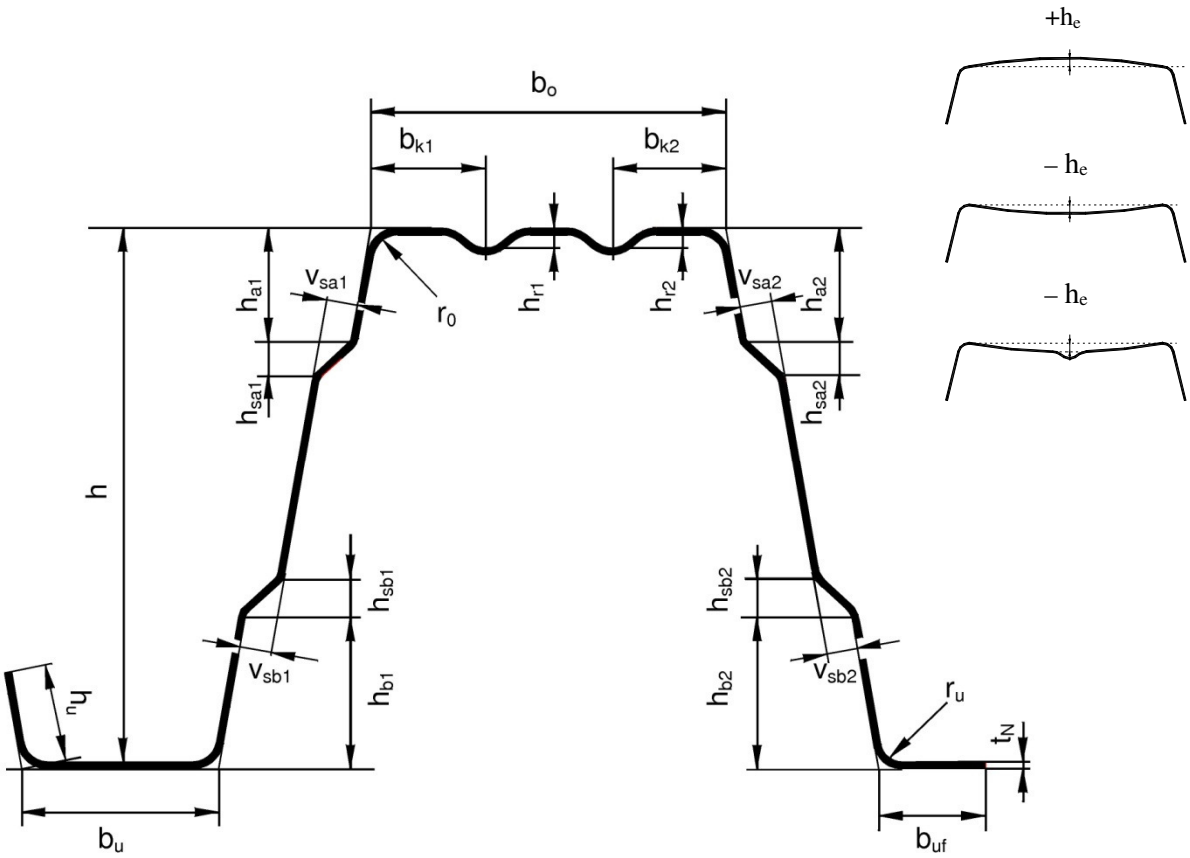

Figure 3.1: Cross section - trapezoidal sheet

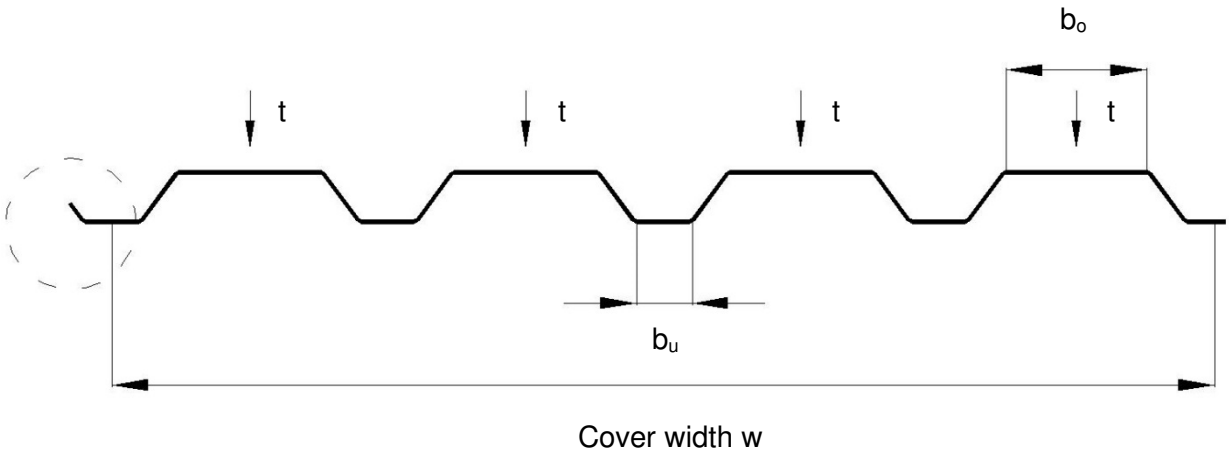

Figure 3.2: Measuring points for sheet thickness t and deviation of side lap D

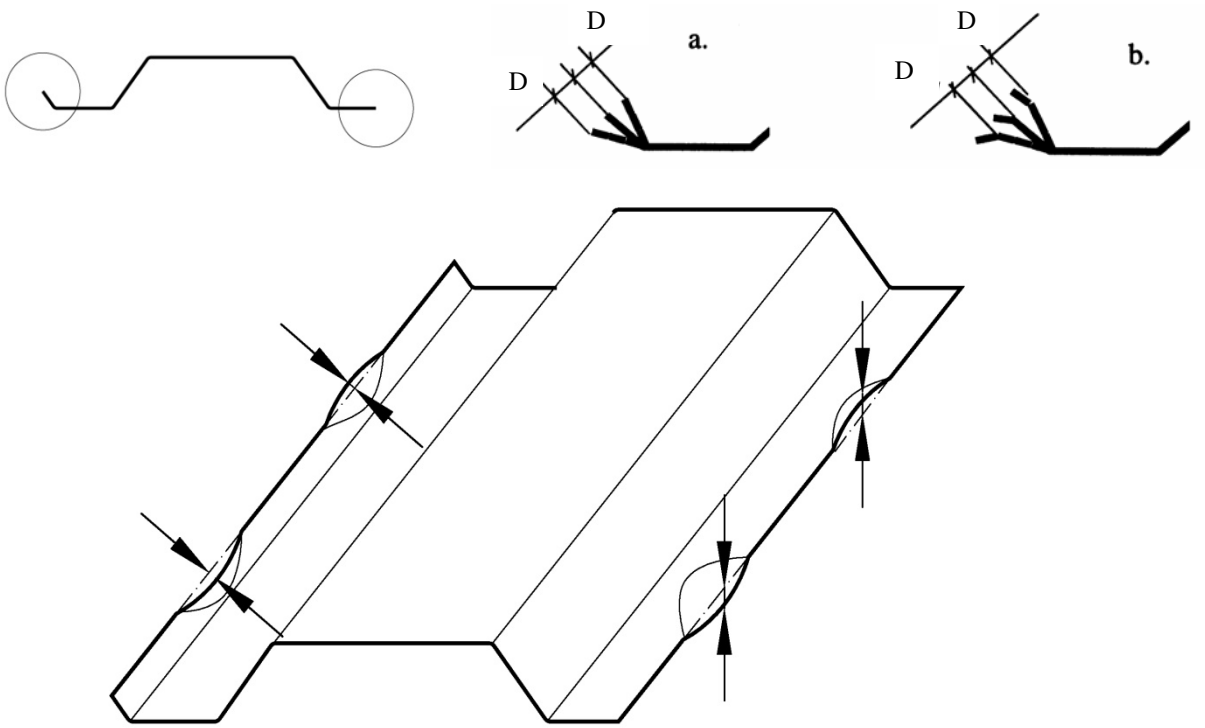

Figure 3.3: Deviation of side lap D (visible side lap)

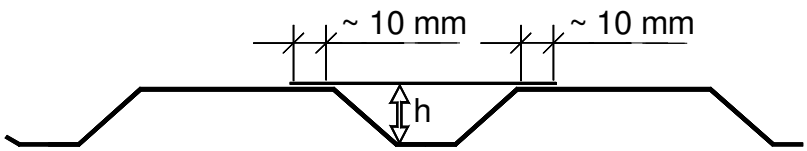

Figure 3.4: Measurement of the depth of profile h

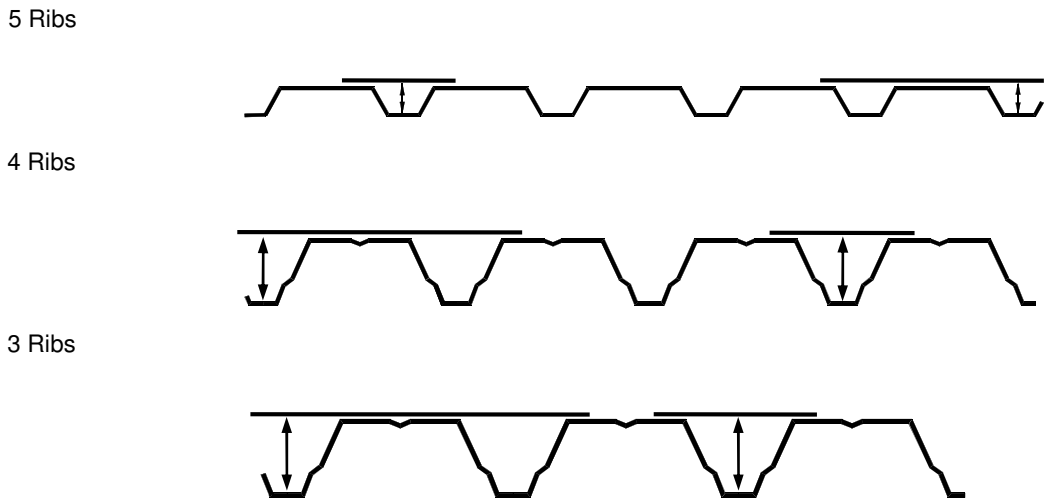

Figure 3.5: Measuring points for depth of profile h

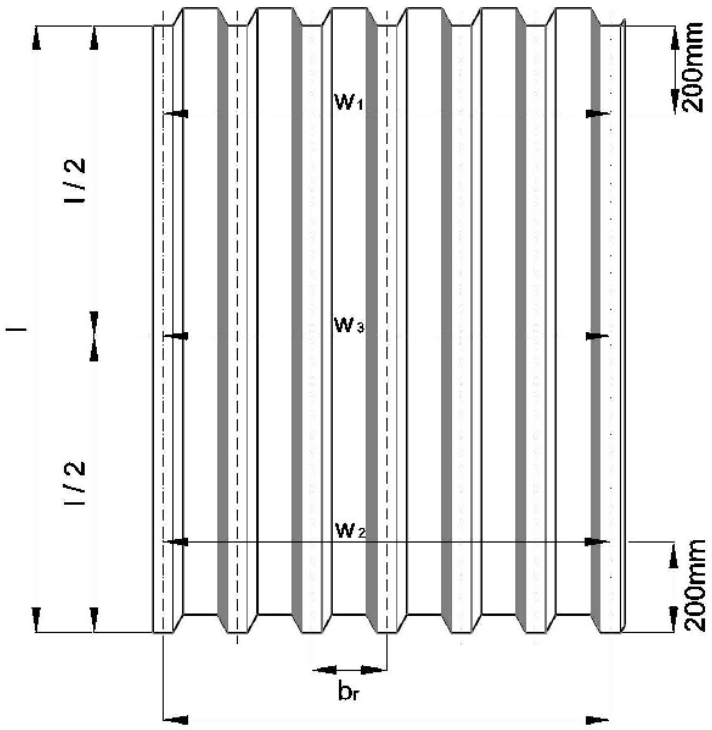

Cover width w = x • b_R

Note: Measurement of length of profile at the middle rib(s)

Figure 3.6: Measurement of the cover width w at both ends and the contraction or bulging w_3 in the middle of the profile

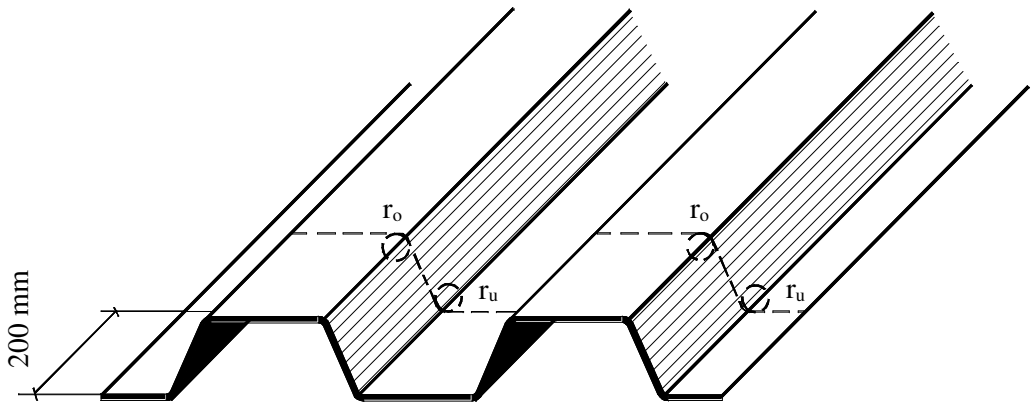

Figure 3.7: Measurement of radius of bends r

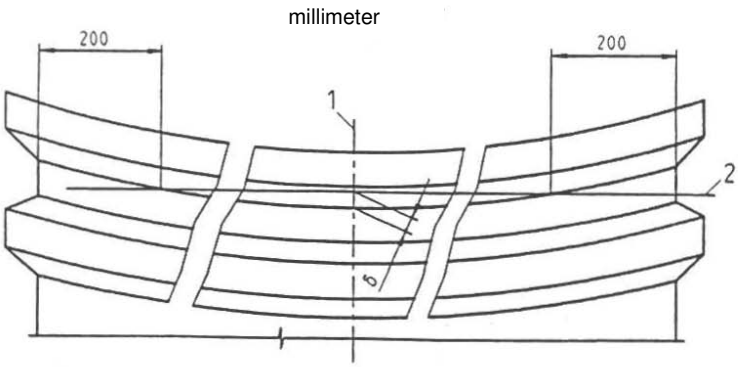

1 central axis
2 straight line at the edge of crown
δ Deviation of crown from the ideal straight line

Figure 3.8: Measurement of deviation from straightness δ

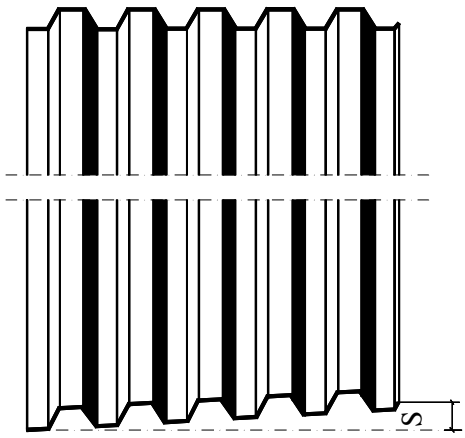

Figure 3.9: Measurement of deviation from squareness S

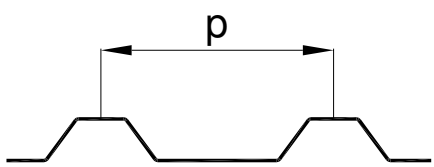

Figure 3.10: Pitch of the profile

Cross section trapezoidal sheet

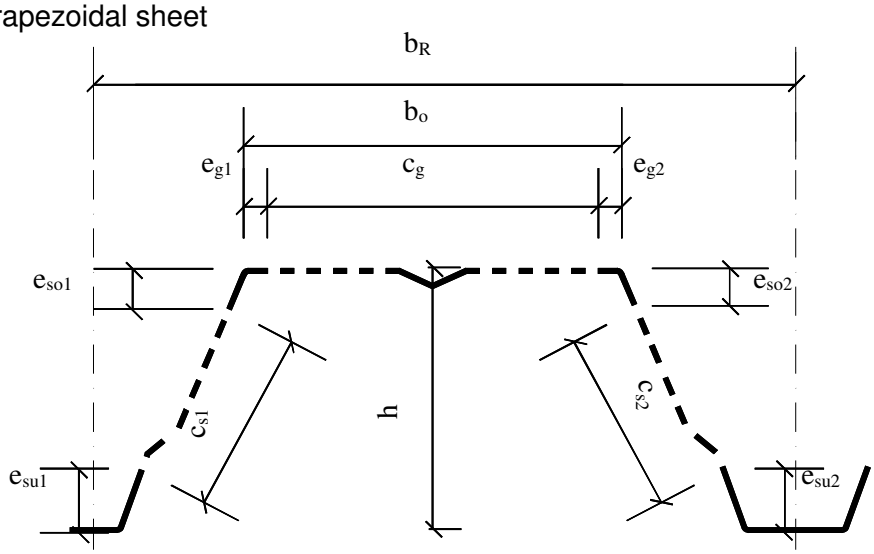

Holes

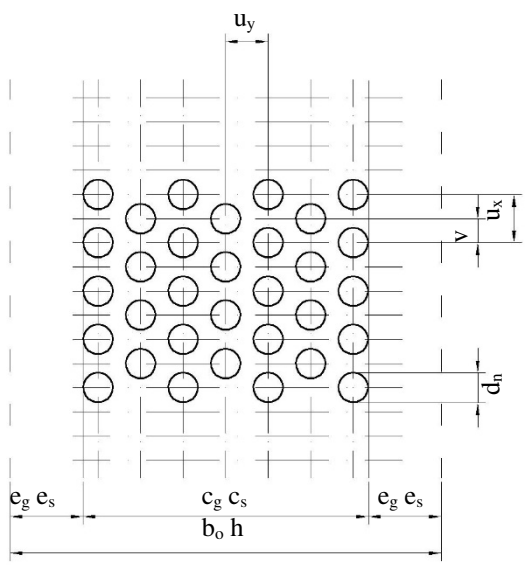

d_n = Hole diameter
u_x = Vertical hole pitch
u_y = Horizontal hole pitch

Figure 3.11: Acoustic profiles

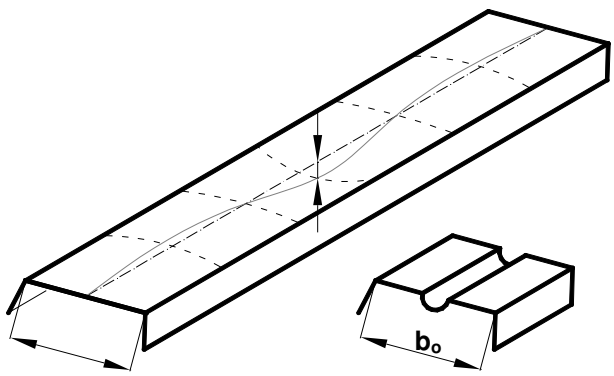

Figure 3.12: Flatness of unstiffened and stiffened flange or web

3.4.2. Dimensions of sinusoidal profiles and tiles

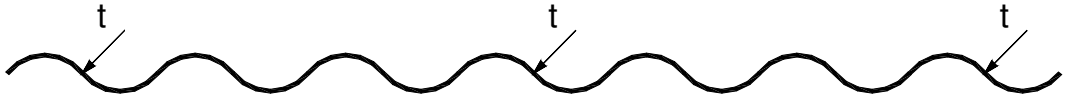

Figure 3.13: Measuring points for sheet thickness t

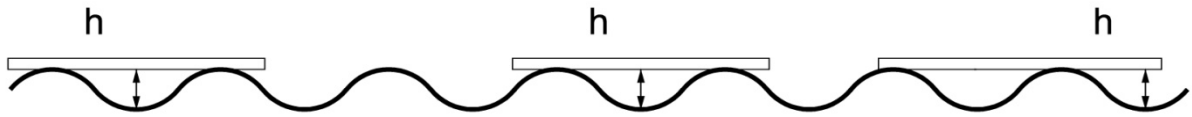

Figure 3.14: Measurement of the depth of profile h

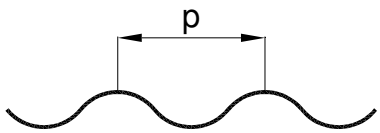

Figure 3.15: Measurement of the pitch of the profile p

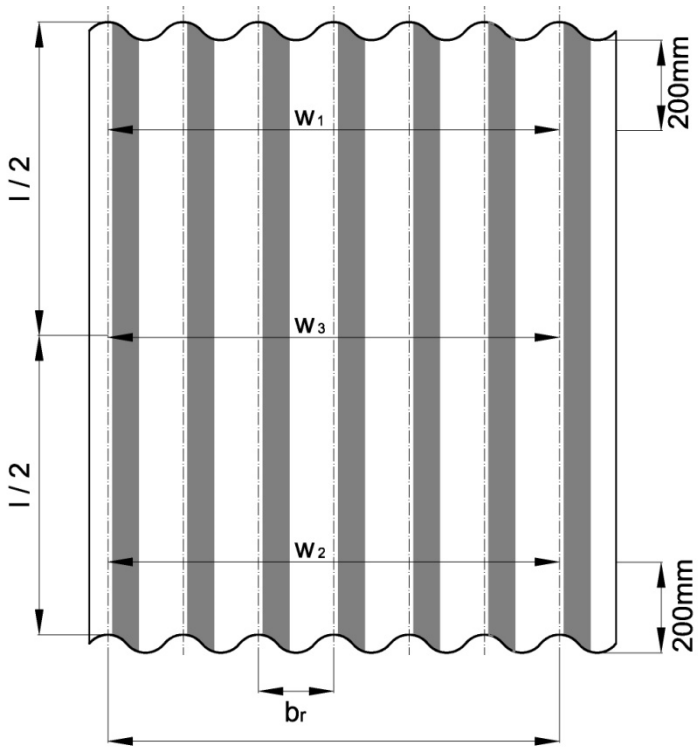

Cover width $w = x \bullet b_r$

Figure 3.16: Measurement of cover width w at both ends and of the contraction or bulging w_3 in the middle of the profile

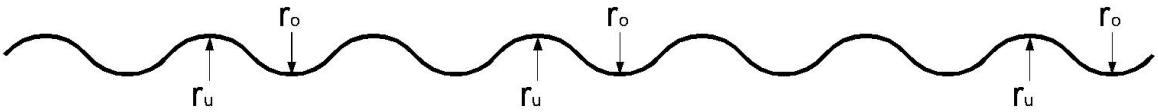

Figure 3.17: Measurement of radius of bends r

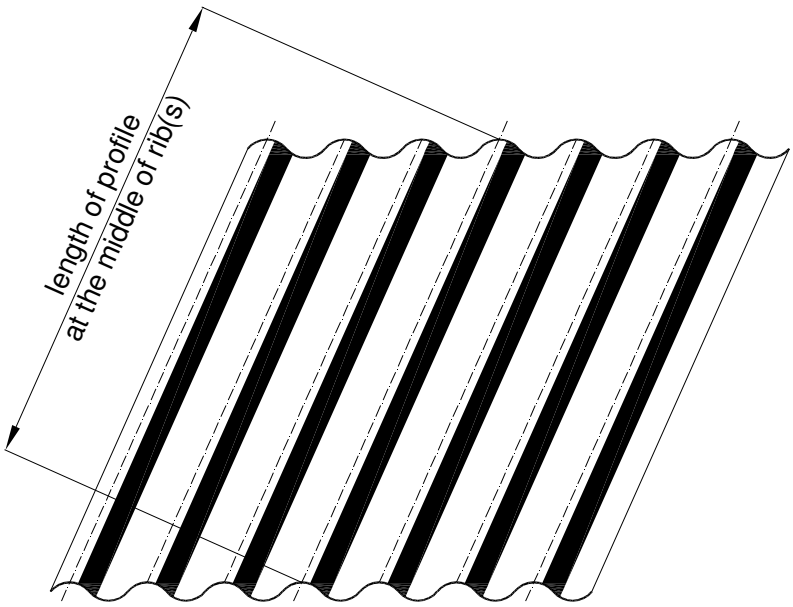

Figure 3.18: Measurement of length of profile at the middle rib(s)

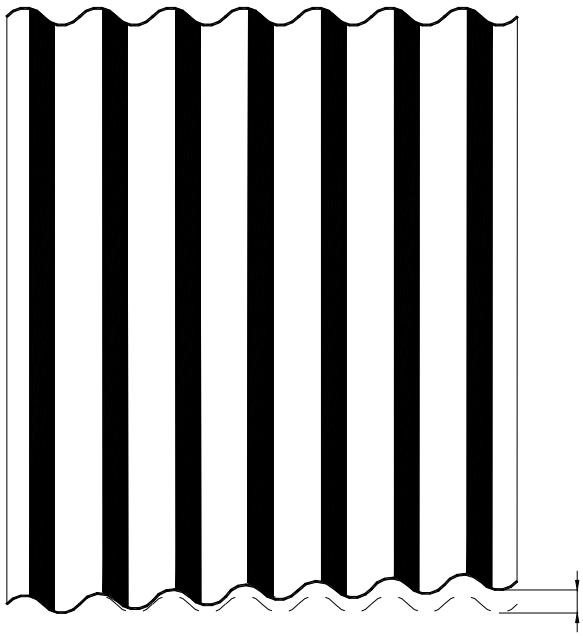

Figure 3.19: Measurement of deviation from squareness S

Figure 3.20: Deviation of side lap D

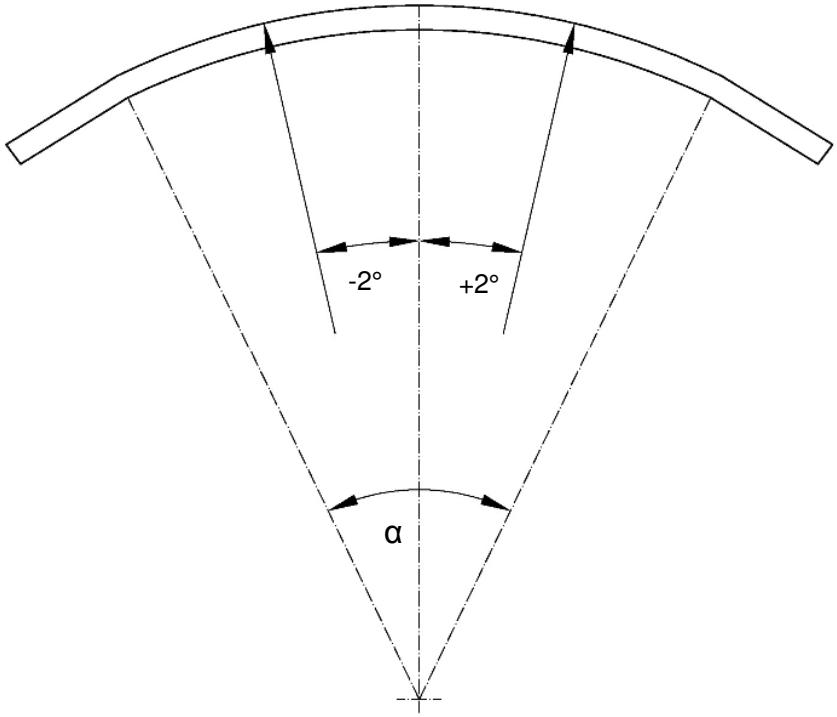

Figure 3.21: Web angular displacement α (only for tile profiles)

3.4.3. Dimensions of cassettes and liner trays

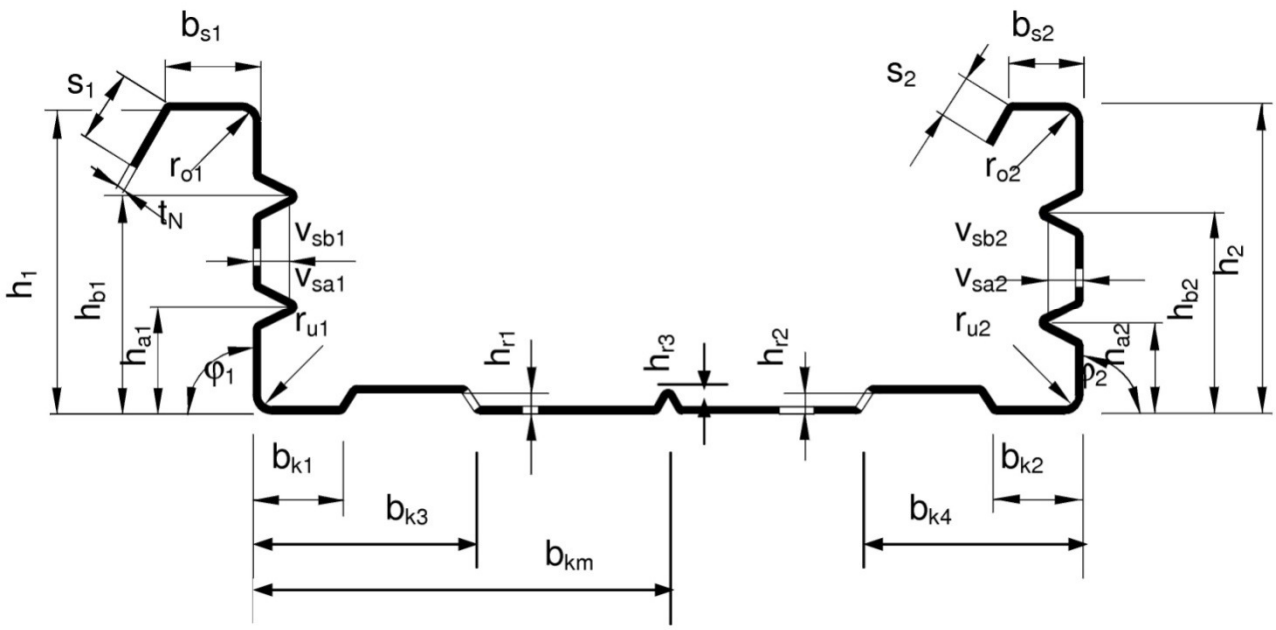

Figure 3.22: Cross section of liner trays

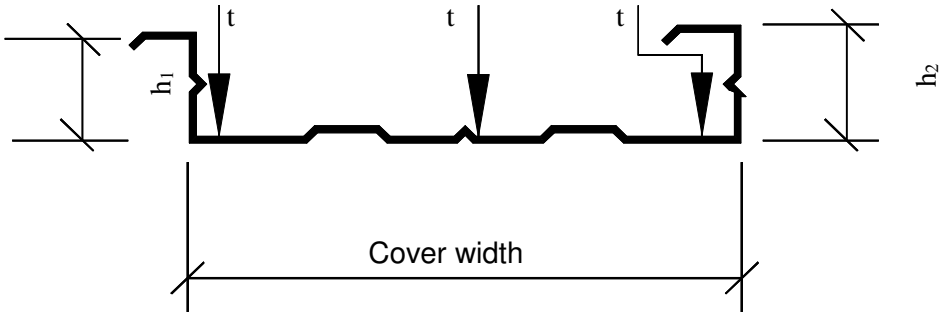

Figure 3.23: Measuring points for sheet thickness t and depth of profile h

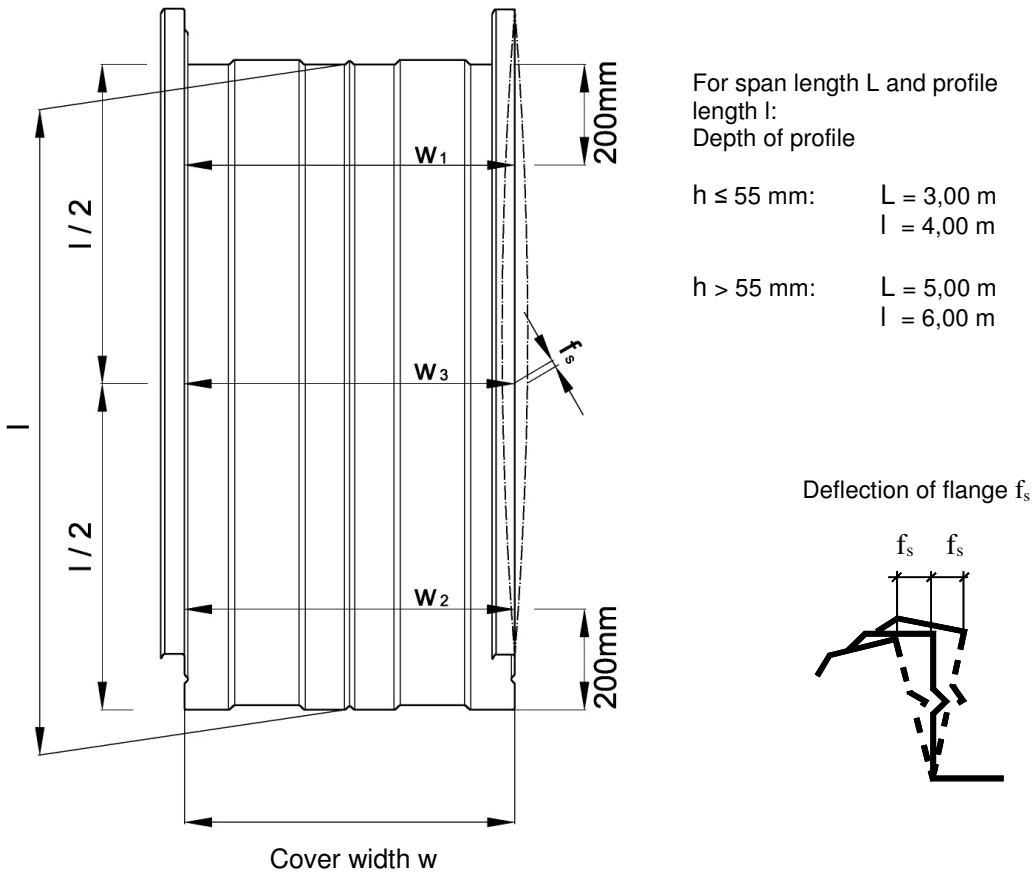

Figure 3.24: Measurement of cover width w, length of profile l and deflection of flange f_s

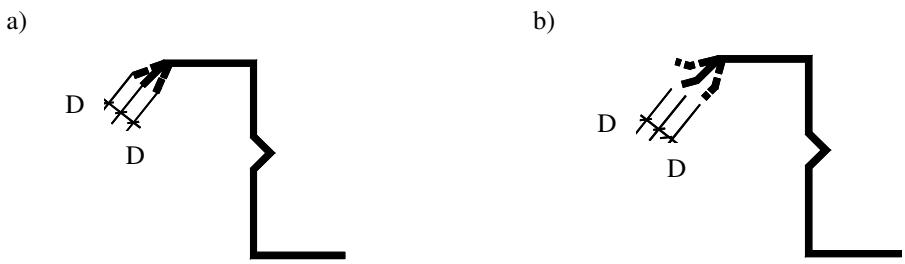

Figure 3.25: Deviation of side lap D

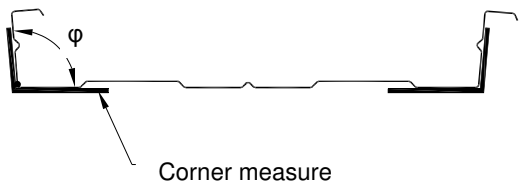

Figure 3.26: Measurement of corner angle flange/web

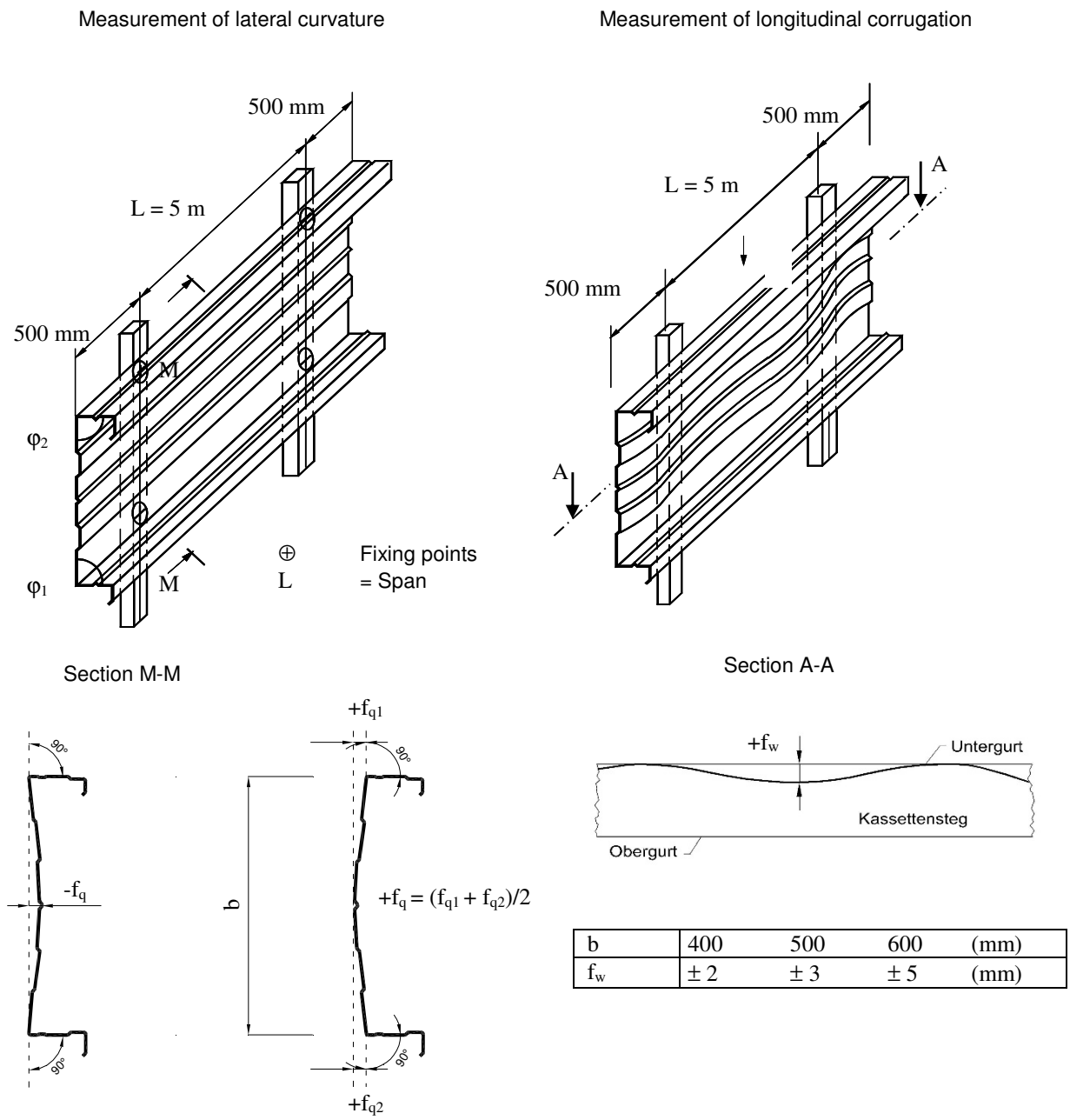

b	400	500	600	(mm)
f_w	± 2	± 3	± 5	(mm)

Figure 3.27: Measurement of the lateral curvature

Cross section liner tray

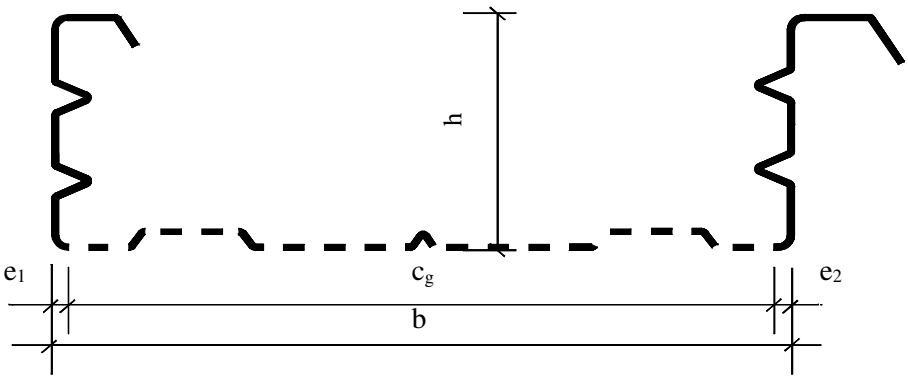

Holes

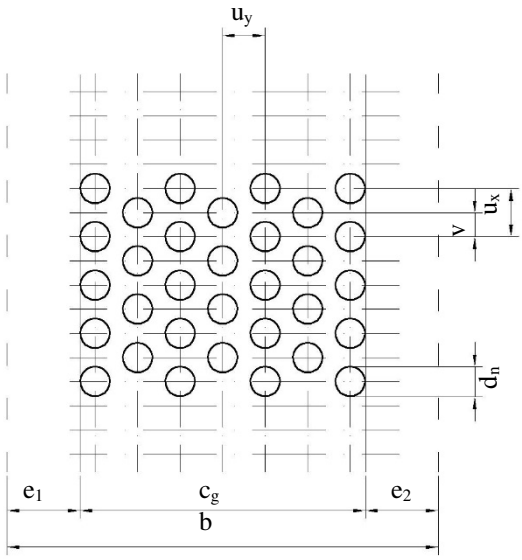

d_n = Hole diameter
u_x = Vertical hole pitch
u_y = Horizontal hole pitch

Figure 3.28: Acoustic profiles

Europark Fichtenhain A 13 a
47807 Krefeld, Germany

Tel. +49 2151 93630-0
Fax +49 2151 93630-29
info@ppa-europe.eu

www.epaq.eu